KATANA 6
BOWL CUTTERS
40793052

Main Features



- 6 Litre Single speed Bowl Cutter
- Completely made in AISI 304 stainless steel
- Blade driven by powerful ventilated asynchronous motor
- Sturdy, removable AISI 304 stainless steel bowl
- Stainless steel lid with high resistance hood in Triton
- Easily removable interlocking lid to facilitate cleaning and sanitising
- Controls with IP67 stainless steel buttons
- Easily removable blade hub with 3 blades standard (configurable to 2 blades)
- Dedicated knives available for specialpurposes
- Maximum protection against liquid infiltration on the shaft
- Perfect for meat, fish and vegetables, but also suitable for many other types or processing
- Completely disassemble for Cleaning





SPECIFICATIONS

Voltage	220 -240 Volts
Power	370 Watts / 0.5 HP, Single Phase
Speed	1440 RPM
Weight	61 kg
Plug Supplied	Yes, 10 amp
Capacity	6 L
Blades	3

ACCESSORIES

Stand to suit
Choice of 3 Blades

DIMENTIONS

External Width	832mm
External Depth	516mm

FRONT

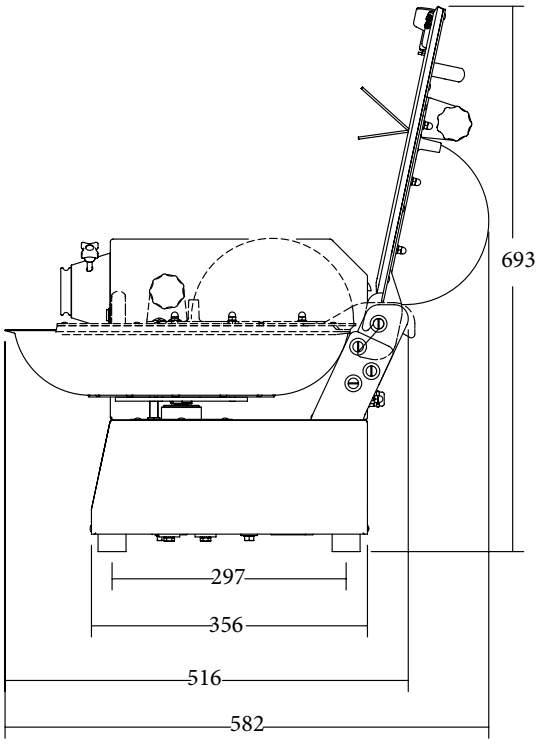

SIDE

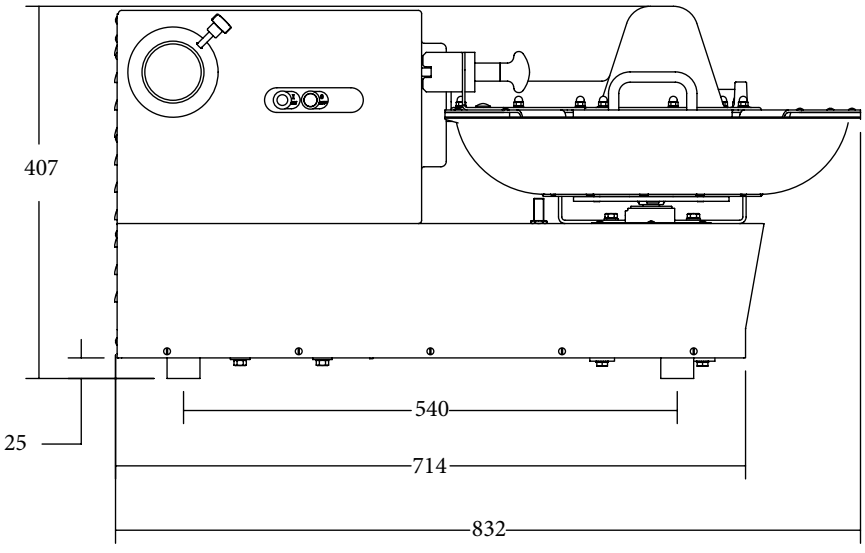

We reserve the right to alter specifications without notice.