EX-TRACTOR
automatic sieve



- *Is a modern motorized vegetable mill which, thanks to its interchangeable sieve system, allows you to process fruit and vegetables at great speed. It can also be used as a pitter for ripe fruit, where the pulp can be easily separated from the bone.*
- *Machine with simple use and easy maintenance, quick and easy even in cleaning operations.*
- *Machine body made of AISI 304 stainless steel*
- *Hopper, head, spatula blade and sieves are made of Aisi 304 stainless steel, they can be easily disassembled and washed in the dishwasher*
- *Different filters with 1, 3 and 5 mm mesh available, not included.*
- *Perfect for fruit and vegetable jams and compotes, excellent for tomato purée and vegetables in general.*
- *Useful for extracting both fish and meat concentrates using cooking juices.*
- *Equipped with two containers to collect waste and refined product separately*



3 cylindrical sieves available, not included

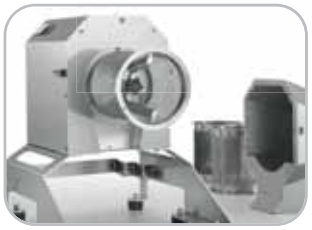

Easy disassembly



IP 67 stainless steel controls



Stainless steel paddle structure



Easy cleaning

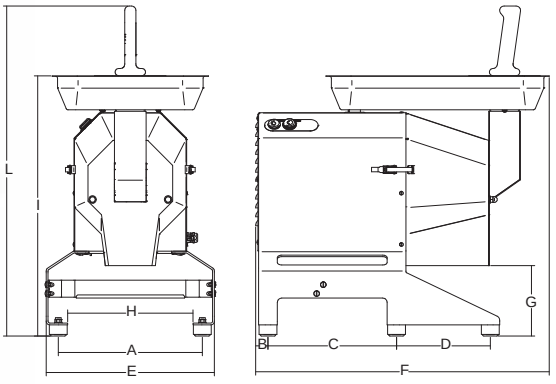

	watt/Hp		r.p.m.	lt	A mm	B mm	C mm	D mm	E mm	F mm	G mm	H mm	I mm	L mm	kg	mm	kg
Ex-Tractor	745/1	1ph	1300	10	323	28	288	210	377	657	158	281	583	739	38	750x580x800	49