DRAKE MAN

manual steak tenderizer/meat strip cutter

- *Manual operated steak tenderizer*
- *Stainless steel AISI 304 construction*
- *Feeding hopper 25 cm wide, best in its class*
- *AISI 304 blade protection shields.Blade assembly easily removable and changeable*
- *Easily removable combs and blade assembly for a deeper sanification*
- *Switchable handle for left-handed operators*
- *Cutting blade assembly not included*





Tenderizing knives with 96 blades



Meat strip cutter
8 - 10 - 15 mm

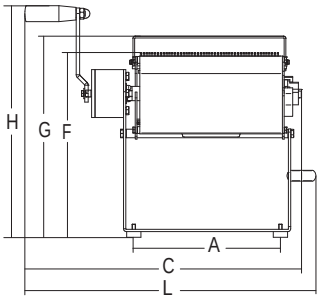

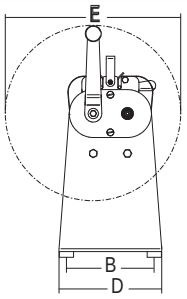

	Ø	A	B	C	D	E	F	G	H	L	KG		
	mm	*mm*	*mm*	*mm*	*mm*	*mm*	*mm*	*mm*	*mm*	*mm*	*kg*	*mm*	*kg*
Drake Man	30x250	253	154	490	180	308	330	353	406	514	7.5	305x517x440	8
Gruppo lame inteneritrice ***Tenderizing blade assembly***	-	-	-	-	-	-	-	-	-	-	5.7	170x405x210	6.20
Gruppo lame taglio ***Cutting blade assembly***	-	-	-	-	-	-	-	-	-	-	5.7	170x405x210	6.20



