ANNIVERSARIO LX 350

- *A perfect mix of classical elegance with modern functionality*
- *Fusion of style and ergonomics, easy use and good taste, practical and exclusive*
- *A poem of lines, lights, colours and technics, pure, simple and durable technics*
- *Solid cast iron construction epossidic painted*
- *Carriage and other details made of anodized alluminium alloy*
- *BS2 self adjusting blocking arm*
- *Stainless steel removable remnant holder*
- *Carriage easy to remove*











Optional colors

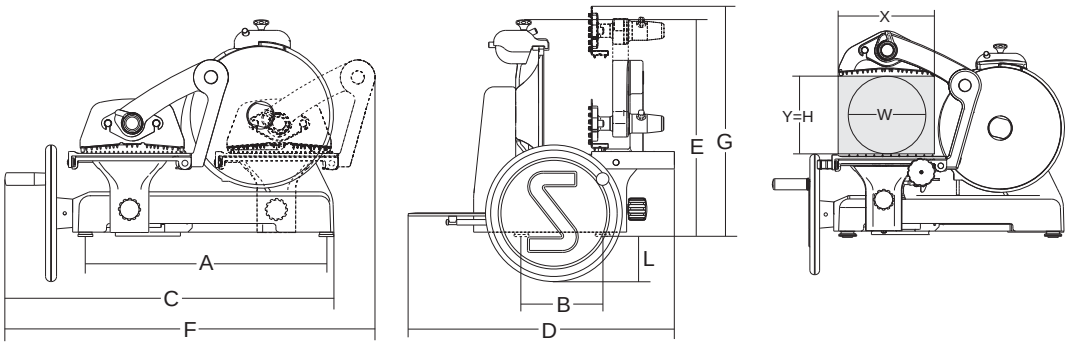

	mm-inch	mm	mm	mm	mm	mm	mm	mm	mm	mm	mm	mm	mm	mm	mm	mm	mm	kg	mm	kg
LX 350	350/14"	3	345	350x330	592	180	820	780	560	910	615	120	330	255	255	255	72	960x920x860	90



BS2 self adjusting blocking arm



More space between blade and body machine



Removable blade protection



Standard glass surface



Optional stand with marble surface



White 2141 surface



Sand-Coloured V. 2300 surface



White marble surface Carrara



White Starlight surface