DATA SHEET

Sirman Raviomatic Independent Motorized Ravioli Maker

40111582

Build

- Electric stand alone ravioli maker produces single-layer extruded ravioli, ensuring consistent quality and efficiency.
- Works independently with puff pastry produced by any machine, with the puff needing to be 135 mm wide and rolled on a loading roller.
- Equipped with a variable-speed independent motor, it adapts to any type of machine, providing high performance and flexibility.
- It's practical, flexible, and fast, offering versatility and speed to enhance productivity in various culinary settings.
- Moulds of different shapes and sizes, allowing for the creation of diverse ravioli designs.
- Each component in contact with the pasta can be easily dismantled for efficient and rapid cleaning, ensuring convenience and hygiene.
- The practical system for adjusting the amount of filling allows for customization based on recipe requirements.



Technical specifications

External Size

External Width	528mm
External Depth	346mm
External Height	561mm

Weight

Net weight	
package weight	

Connection requirements electric

Electrical connected loads	100W
Voltage	240 1N/50Hz
Plug Supplied	Yes

Warranty

2 Year Warranty	2 years parts and labour

**Subject to a prevanttitive maintence plan*

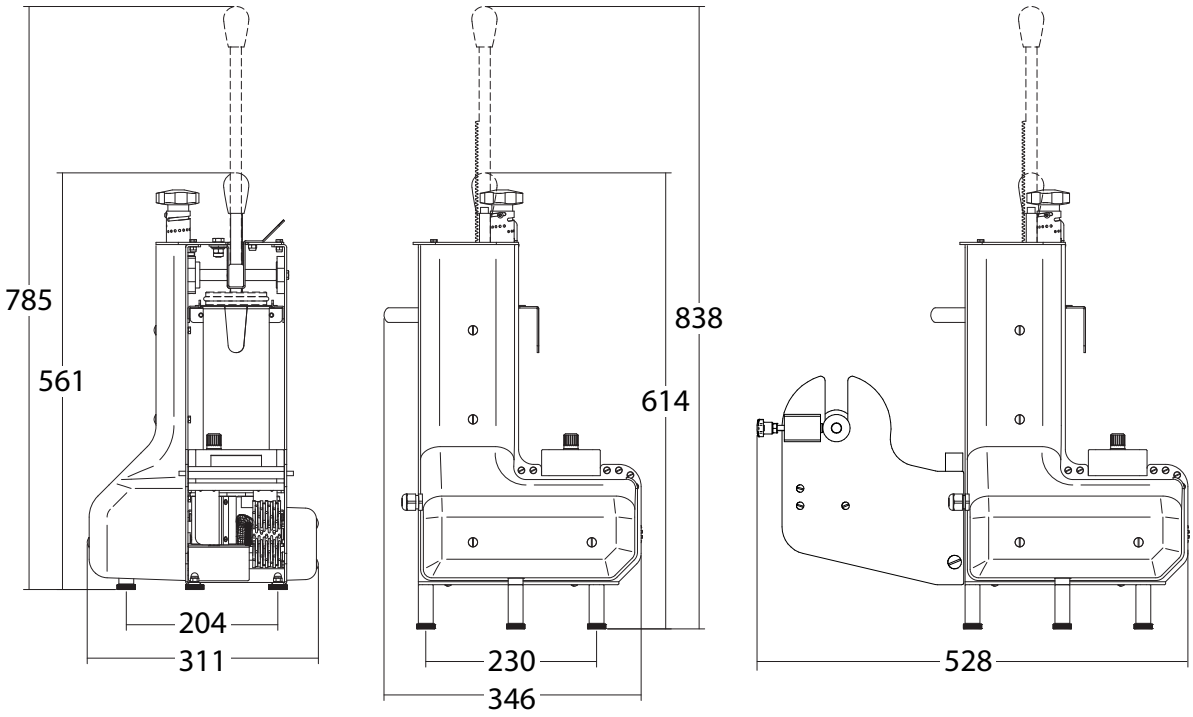

DATA SHEET

Sirman Raviomatic Independent Motorized Ravioli Maker

40111582

Optional accessories

S/steel support cylinder	
SKU	40111570

Kit imbuto diam. foro 8 mm RAVIOMATIC	
SKU	LF02300025

Kit imbuto diam. foro 12 mm RAVIOMATIC	
SKU	LF02300030

i. Large ravioli 0.8 mm	
SKU	LF202505330

ii. Large ravioli 1 mm	
SKU	LF202505331

iii. Small ravioli 0.8 mm	
SKU	LF202505333

iv. small ravioli 1 mm	
SKU	LF202505334

Device for interchangeable moulds	
SKU	LF02300110100

1. Rettangolare piccolo seghettato 50x42 mm	
SKU	LF20250136A

2. Rettangolare grande seghettato 70x50 mm	
SKU	LF20250136B

3. Mezzaluna piccolo seghettato 50 x 31 mm	
SKU	LF20250136C

4. Mezzaluna grande seghettato 72 x 49 mm	
SKU	LF20250136D

5. Schlutzkrapfen mezzaluna piccolo liscio	
SKU	LF20250136E

6. Triangolare 70 x 40 mm	
SKU	LF20250136G

7. Schlutzkrapfen mezzaluna grande liscio	
SKU	LF20250136H

8. Quadrato seghettato 37 x 37 mm	
SKU	LF20250136I

1. Rettangolare piccolo seghettato 50x42mm	
SKU	LF20250137A

2. Rettangolare grande seghettato 70x50 mm	
SKU	LF20250137B

3. Mezzaluna piccolo seghettato 50 x 31 mm	
SKU	LF20250137C

4. Mezzaluna grande seghettato 72 x 49 mm	
SKU	LF20250137D

5. Schlutzkrapfen mezzaluna piccolo liscio	
SKU	LF20250137E

6. Triangolare 70 x 40 mm	
SKU	LF20250137G

7. Schlutzkrapfen mezzaluna grande liscio	
SKU	LF20250137H

8. Quadrato seghettato 37 x 37 mm	
SKU	LF20250137I

A. ST. RAVIOLI RETTANG.IRR.PICC.SEGHETT	
SKU	40111600A

B. ST.RAVIOLI MEZZALUNA PICC.SEGHETT 16mm	
SKU	40111600C

C. ST.RAVIOLI MEZZALUNA GRAN.SEGHETT	
SKU	40111600D

D. ST.RAVIOLI MEZZALUNA PICC.LISCIO	
SKU	40111600E

E. ST.RAVIOLI TRIANGOLARE	
SKU	40111600G

F. ST.RAVIOLI MEZZALUNA GRANDE LISCIO	
SKU	40111600H

G. ST.RAVIOLI QUADRATO C/CAPPE 37x37	
SKU	40111600I

Connection Kits

Connection kit orchestra 10	
SKU	LF202505338

Connection kit Concerto 5	
SKU	LF202505340