DATA SHEET

Sirman Orione Q PLUS VV Variable Speed Blender with Pre-set Blending Programs

65332802P



Build

- Designed for bars, restaurants, and cafeterias that demand high performance, long-lasting durability, and powerful ice-blending capabilities—perfect for preparing frozen drinks and smoothies.
- Robust extruded aluminium body with ABS sides for strength and easy maintenance.
- Equipped with a membrane sealing system to prevent fluid ingress, ensuring machine longevity.
- Powered by a high-performance motor with forced ventilation for extended operation without overheating.
- Safety magnetic micro-switch on the glass lid that stops without a forced closing position.
- User-friendly silicon membrane controls with ON, OFF, and PROGRAM functions along with an NVR (No-Voltage Release) device.
- Switch between two modes of operation: variable speed with manual control or automatic mode with 10 pre-set programs tailored for different drink blending needs.
- Comes with a 2-litre square jar made from unbreakable transparent Tritan, graduated in litres, UK, and US gallons.
- Pouring is possible in three directions, ideal for fast service and multitasking.
- Rubber glass lid with central plug allows easy addition of ingredients during mixing.
- Stainless steel transmission hub easily detaches from the jar for thorough cleaning.
- Cutter shaft is supported by ball bearings to prevent overheating and extend lifespan.
- Star drive mechanism built from high-resistance sintered steel for tough use.
- Four-spoke cutter pressed from a single piece of hardened steel, effective even for ice crushing.
- Jar design optimized for blending large quantities of ice, including dry ice.
- Multi-point motor drive system in stainless steel for maximum power transmission and durability.

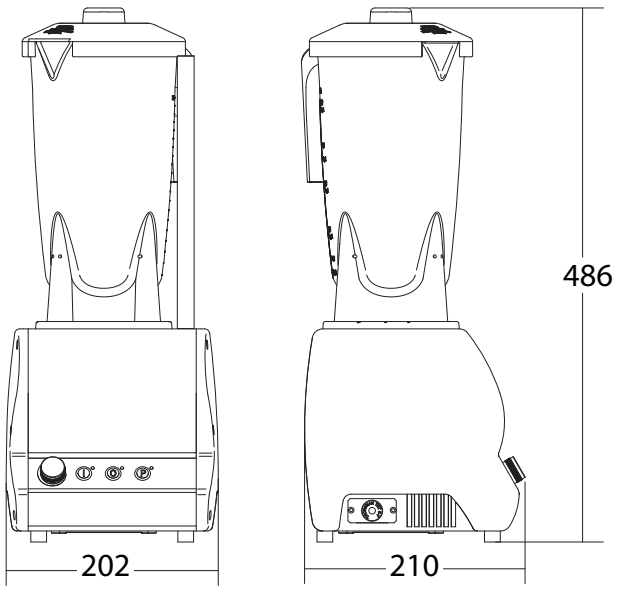

Technical specifications

External Size

External Width	202mm
External Depth	210mm
External Height	486mm

Weight

Net weight	5kg
package weight	7kg

Technical Features

Jug capacity	2 Lt
RPM	8000÷16000

Control Types

Manual Mode	Variable speed start and stop
Programmable Mode	10 Preset programs

Connection requirements electric

Electrical connected loads	750W
Voltage	240 1N/50Hz
Plug Supplied	Yes

Warranty

2 Year Warranty	2 years parts and labour

**Subject to a prevanttitive maintence plan*

Options

Basket

☐ 2 lt. Tritan square glass conatiner w/ blade set and lid included
SKU: IB9865410