TC 12-22 DAKOTA

tritacarne
meat grinders



TC 22 DAKOTA



TC 22 DAKOTA FX

- *Easily transportable thanks to practical handles.*
- *Anodized aluminum body and ABS shockproof or s/steel sides.*
- *Generous ventilated motor.*
- *reduction system in an oil bath gears.*
- *hardened and ground helical gears.*
- *Mouth stainless steel AISI 304 meat grinder (or aluminum on mod. 22).*
- *S/steel plate and knife.*
- *Controls with standard reverse gear.*

CE version with:

- *24 volt controls and NVR device.*



Optional tomato sauce making for TC12

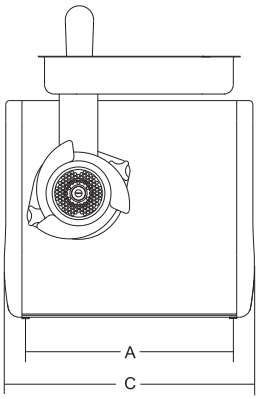

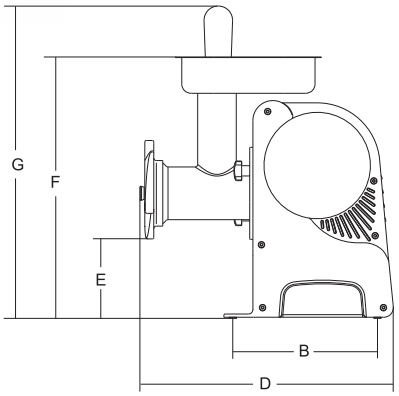

	watt/Hp		Kg/h.	ø mm	A mm	B mm	C mm	D mm	E mm	F mm	G mm	kg	mm	kg
TC 12 Dakota	1ph 750/1 3ph 1.100/1.5	1ph/3ph	95	6	310	225	395	360	130	415	485	24	570x750x800	34
TC 12 Dakota FX	1ph 750/1 3ph 1.100/1.5	1ph/3ph	95	6	336	210	450	414	140	405	465	24	570x750x800	34
TC 22 Dakota	1ph 750/1 3ph 1.100/1.5	1ph/3ph	120	4.5	310	225	395	360	115	415	485	26	570x750x800	36
TC 22 Dakota FX	1ph 750/1 3ph 1.100/1.5	1ph/3ph	120	4.5	336	210	460	450	127	411	472	26	570x750x800	36