SCHNITZEL MASTER PROFI

HEAVY DUTY MANUAL MEAT FLATTENER & TENDERIZER

PROFI

SCHNITZEL MASTER PROFI - BENCHTOP MANUAL SENSITIVE MEAT MASTERING® MACHINE.

The SCHNITZELMASTER Profi replaces the traditional meat pounder and works with a new process for meat tenderizing called "mastering®". This Patented system ensures meat fibers are neither pressed, nor steaked, nor battered in the process, but it is only carefully stretched in a longitudinal and lateral direction so the customer experiences a completely different taste experience and the fresh meat character is preserved.

It is a compact and efficient benchtop machine designed for rolling and flattening chicken & other boonless proteins such as veal, pork and lamb, into steaks and schnitzels whilst maintaining complete water retention and the original texture and fibers within the meat.

Made from 304 stainless steel and high-grade food plastic Polypropylene (PP), it is heavy duty, easy to use and features a hygienic design that makes cleaning and maintenance easy. Its roller width of 240mm makes it suitable for most butcher shops, supermarkets, restaurants and other smaller food production settings.

The Schnitzelmaster is a proven product and its meat mastering® process increases the meat surface area by up to 50%, so customers can be presented with larger consistent portions and operators can reduce the portion size required, allowing them to enjoy a significant cost advantage. Because of this soft stretching, juice remains in the meat and this means little loss of weight and therefore a higher weight for sale. This Mastering ® process also maintains a desirable meat PH and this ensures the meat will be tender and soft.

Not only is the surface layer of the meat considerably compressed and stretched more than any other method, it is also proven they have the lowest shrinkage during cooking/grilling all whilst yielding the largest surface area and providing customers with consistent cooking times thanks to the accurate thickness controls.

Only Mastered®meat has an extended shelf life of up to eight days and this allows the operators to prepare meat well in advanced and also store it for longer periods of time all whilst maintaining the original character of the fresh meat and ensuring minimal loss to appearance, tenderness, texture, consistency and of course taste.

SPECIFICATIIONS

Roller Width	240mm
Diamter of Roller	98mm
Weight	15.7kg
Warranty	12 months warranty parts and labour

DIMENSIONS

machine dimensions WxDxH (mm) (inc Handle)	465 x 230 x 275

OPTIONS

Foils for Profi & Maxi	---
quick fastening plate for Profi & Maxi	---
steak rollers for Profi & Maxi	---
plain rollers for shortcrusts	---



Back:



MAIN FEATURES

- Sturdy, Heavy duty, high-quality benchtop flattener that can process any boneless meat.
- Noiseless, Effortless, Hygienic and maintenance-free machine that processes meat effortlessly and quickly.
- Works with a new patented method to soften meat called "mastering®". With this procedure the meat fibres are neither pressed, nor steaked, nor battered in the process, but it is only carefully stretched in a longitudinal and lateral direction so the customer experiences a completely different taste experience and the fresh meat character is preserved. i.e. more juice remains in the meat.
- Does not destroy the meat's cell structure, like other tenderising methods (e.g. using tenderising mallets) and keeps the character of fresh meat in original form ensuring minimal loss to appearance, tenderness, texture, consistency and of course taste.
- Increases the meat surface area by up to 50% , saving food costs for operator and presenting larger portions for customers.
- Saves 50 percent work time compared to the traditional meat mallet
- Meat thickness is individually selectable to meet precise operator requirements.
- Consistent cooking times due to identical meat thickness.
- lowest shrinkage during cooking/grilling due to superior water retention.
- Maintains complete water reunion in meat fibres and this means little loss of weight and therefore a higher weight for sale.
- Durability of meat, proven to last significantly longer with little loss of integrity over longer periods of time. Extended shelf life of up to eight days and this allows the operators to prepare meat well in advanced and also store it for longer periods
- Easy to clean, can be washed by any commercial dish washer
- Frame constructed from 304 Stainless Steel. Axle, crank and adjustment lever of stainless steel. The drive gears, bearing seats and tenderising rollers models are made of Polypropylene (PP)
- Completely Dismountable in 5 parts for ease of cleaning

SCHNITZEL MASTER PROFI

HEAVY DUTY MANUAL MEAT FLATTENER & TENDERIZER

PROFI

HOW IT WORKS



Select desired meat thickness on the scale.

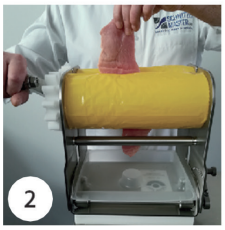

Insert meat from above and turn crank forward at a good pace.

↳ meat fiber is stretched





Turn the crank until the meat is completely engaged by the roller: but do not push it all the way through!

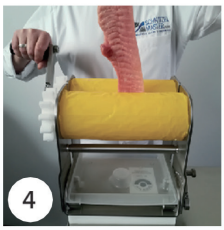

Turn the crank backward - and take out the meat on top of the machine.

↳ meat is smoothed

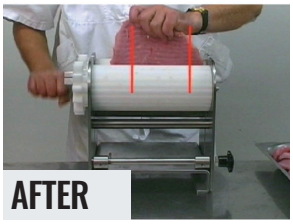

TOP VIEW

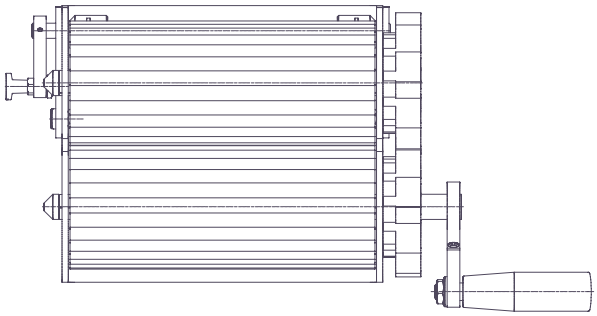

VIEWS OF THE DEVICE

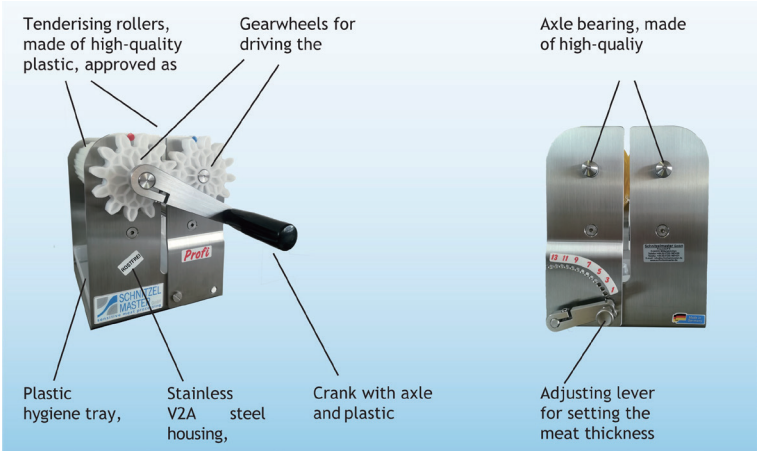

FRONT VIEW

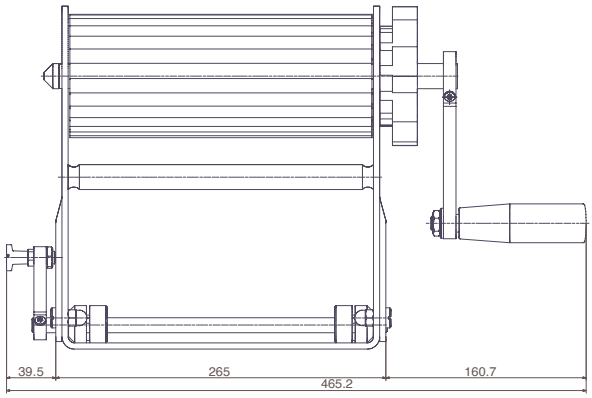

SIDE VIEW (1)

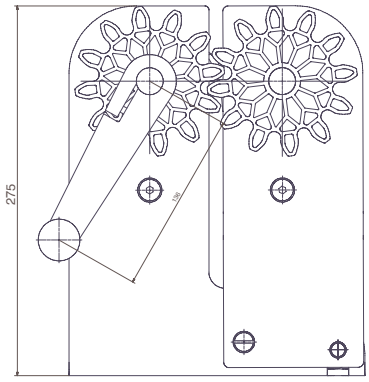

SIDE VIEW (2)

