GRESILVA VERTICAL GRILL GV4

FOUR CHAMBER SMOKELESS ELECTRIC VERTICAL GRILLER WITH HEATED WARMER

GRE.V4.A10

GRESILVIA GV4 VERTICAL GRILLER - REAL BARBEQUED CHICKEN NO SMOKE - NO FAT - EFFICIENT - HEALTHY - REAL FLAVOUR

The Gresilvia Vertical Grill line is perfect for real barbequed chicken, free from fat and carbon residues, healthy, and with all the flavour that customers expect, while being fast and efficient in operation. It is a practical and healthy way of cooking with 100% natural heat emission and providing the perfect environment for the quality and taste of the grilled food yet still preserving its nutritional value.

In the GRESILVA® VERTICAL GRILL, the heat source is positioned to one side, so there are no flames, which means that no benzopyrenes are formed. These are highly carcinogenic substances which are formed whenever organic material, especially of animal or vegetable origin, is charred.

The GV Series, includes an unique inbuilt water bath that directs all fats and waste into it without touching any heat source, eliminating most smoke and fats and allowing an easy clean at the end of the day. The grids work independently with timers allowing the most efficient use of labour and versatility of different products within the different chambers. Cooking temperatures are achieved quickly in minutes and products such as mouth-watering barbeques chickens can be perfected within 20 minutes.

Gresilvia Vertical grills are a trademarked and patented product, and the winner of multiple awards. Although originally designed for barbequed chicken, the GRESILVA® VERTICAL GRILL is also successful for other meats kebabs, ribs, burgers, steaks, wings and so much more.

MAIN FEATURES

ECONOMICAL

- The grids have independent connections and are easily removed for cleaning.
- Low energy consumption (when the grill is working at 100%)
- Each compartment has its own minute timer which allows control of the cooking time of each grid separately, with a buzzer, or without turning off the grill.
- Efficient use of labour as the operator is freed while the food is being grilled in a perfectly controlled cooking environment.
- Temperature adjustable from 50°C to 300°C
- Solenoid valve timer on the water inlet.

FAST

- Turn on, and a couple of minutes later, you're ready to start cooking.
- Steady and consistent heat even during the busiest periods thanks to superior insulation properties.
- Fast high-quality cooking with great results on a large range of foods.
- Barbequed chicken in 20 minutes

ECOLOGICAL

- Minimum consumption of water
- Minimum smoke extraction
- Complete removal and collection of cooking fats with ease.
- No emission of carbon monoxide.

INNOVATIVE

- Vertical grid system
- Lateral heat source
- 100% natural heat emission.
- Waste materials fall directly into the water without touching the heat source.
- In built heated warming chamber for keeping products warm.

HYGIENIC

- Little smoke is given off as there are no flames
- 90% of the waste fats remain in the water, and do not clog up the ventilation ducts;
- Quick and easy daily cleaning – all that is needed is to wash the waste collection tray and the grill racks,
made easier with the use of the washing tank
- Exhibitor smoke conductor.
- Wheels for easy movement

ROBUST

- Stainless steel structure AISI 304;
- Ceramic fibre insulation.





Gold Medal Winner
International Exhibition
Nuremberg IENA Germany

SPECIFICATIIONS

Number of chambers/ grates	4
Capacity/chickens	12
Weight	205 Kg
Rated power	13kw, 400V, 3N~,22A (L1) | 16A (L2) | 16A (L3)
Temp range	50 - 350 °C
Outlet drain waste connection	1" connection for waste drainage (Can be manually drained where waste drain unavailable)
Inlet water supply	¾" threaded tap at maximum 800 Kpa supply pressure
Warranty	4 Years Parts 2 years Labour

DIMENSIONS

Machine dimensions WxDxH (mm) - Cooking chamber	893 x 798 x 1540
Machine dimensions WxDxH (mm) - including vertical grid support	893 x 1255 x 1540
Machine dimensions WxDxH (mm) - including maximum extension opening for vertical grid	893 x 1980 x 1540

GRESILVA VERTICAL GRILL GV4

FOUR CHAMBER SMOKELESS ELECTRIC VERTICAL GRILLER WITH HEATED WARMER
GRE.V4.A10

OPTIONAL ACCESORIES

Vertical Grid XS 0.31 / 8mm

GRE.V1.J40



Thin to medium thickness.
Sausages, pork belly, ribs, steaks, kebabs, wings, burgers, quails and more.

Vertical Grid S 0.75 / 19mm

GRE.V1.J10



Medium thickness
Chicken size 1kg, Ribs, Quails, thick sausages, chorizo, chicken pieces and more.

Vertical Grid XL 1.22 / 31mm

GRE.V1.J30



Twin locking position.
Medium to large thickness
Everything in GRE.V1.J10 plus chicken size up to 1.8kg and larger ribseces and more.

Gutter / Drain

GRE.CA.A50



Exhaust Module Smoke filter

GRE.V4.P10

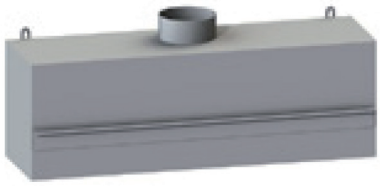

This filter is built from synthetic selected fibers which are easy to dismantle, clean and eliminate smoke.

Exhaust Ductwork for Smoke filter

GRE.V2.P30



Cleaning tank TV4

GRE.T4.M10



Holds four grids and is designed to let you clean the grill racks of the GRESILVA® VERTICAL GRILL more simply and effectively.
Fill the tank and immerse the grill racks whenever they are not being used.

Grid Transporter (5 Grid)

GRE.P5.M10



Designed for the transport of the grids between the grill and the Grill Cleaning Tanks and is highly beneficial

Scraper

GRE.V1.E40



GRESILVA VERTICAL GRILL GV4

FOUR CHAMBER SMOKELESS ELECTRIC VERTICAL GRILLER WITH HEATED WARMER

GRE.V4.A10

HOW IT WORKS

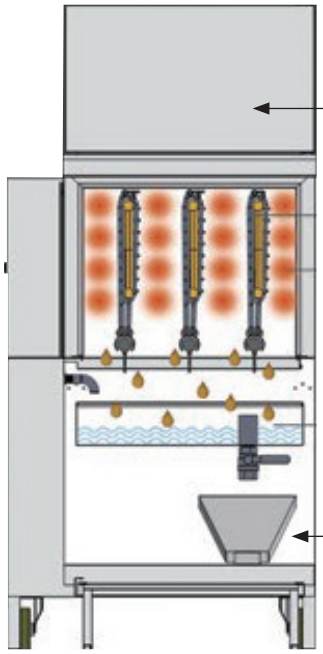





Timers let you control the cooking time of each grid individually. It gives the operator a warning beep signal, but it does not switch off.

Line GV eco

Innovative, fully patented, friendly to the environment and your health

EXHAUST LAYOUT

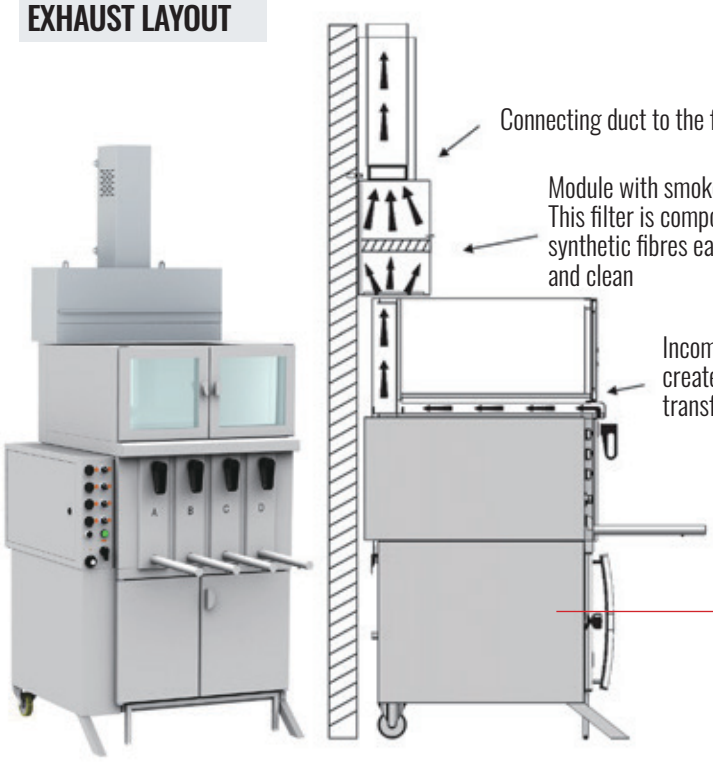

DRAINAGE SYSTEM

A composite drainage system by a water collection container of the receiver drawer to be connected to the grease box.

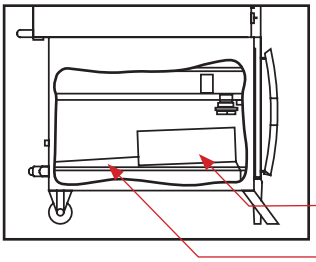

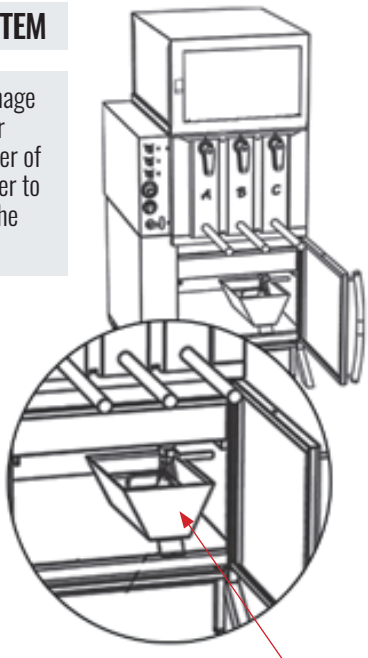

GRESILVA VERTICAL GRILL GV4

FOUR CHAMBER SMOKELESS ELECTRIC VERTICAL GRILLER WITH HEATED WARMER

GRE.V4.A10

FRONT

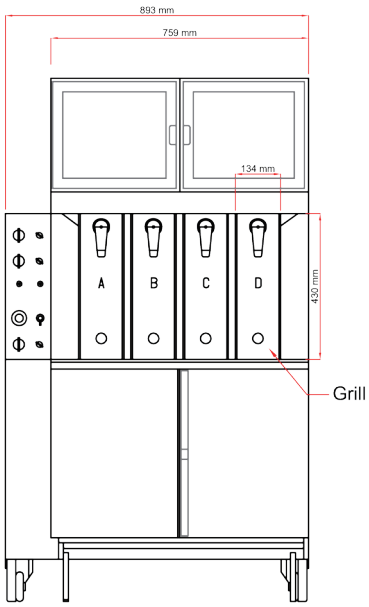

SIDE (CLOSED)

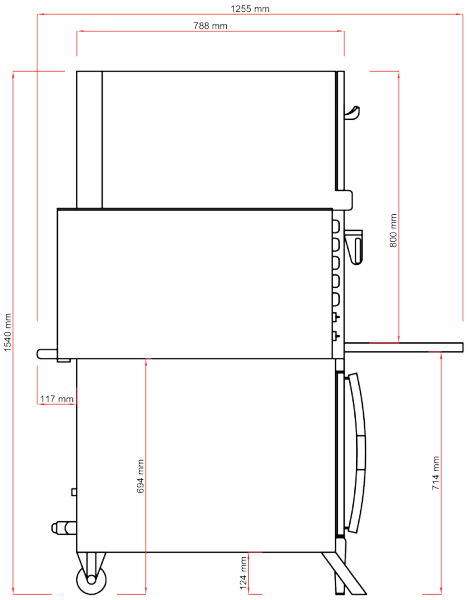

REAR

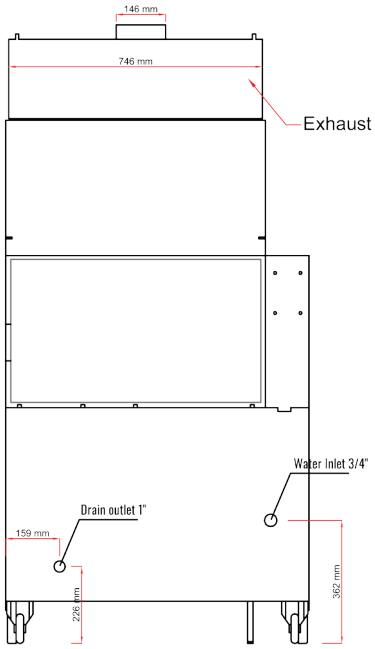

SIDE (OPEN - LOAD)

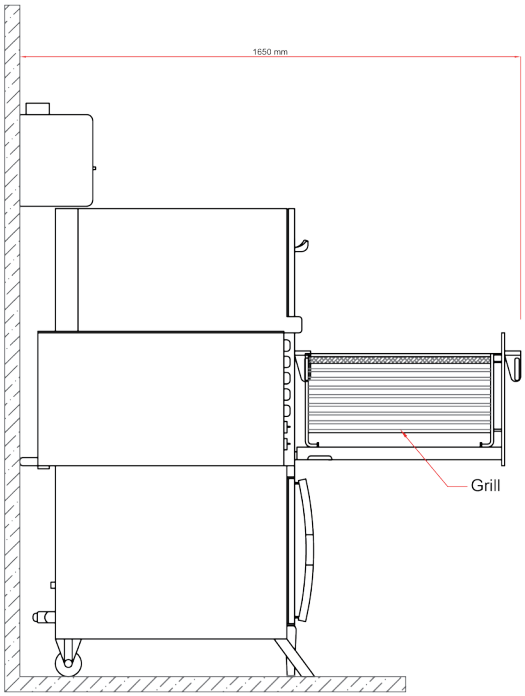

SIDE (OPEN - EXTENDED - WITH EXHAUST)

