# BERNARDI RS-48
## FREESTANDING 48KG DOUBLE ARM MIXER
## RS4823029

## BERNARDI RS-48

The RS series are a compact freestanding double arm kneading mixer for professional use.

The RS-48 is especially suitable for pizza dough, bread and focaccia. It perfectly kneads and oxygentaes 5kg - 48kg of dough to a standard that praises the highest tradition.

The patented compact system enables the double arms to adapt to minimal space requirements and offer exceptional performance.

The RS Series can perfectly combine medium hydration doughs, even up to 75%.

TRY IT AND FALL IN LOVE




## MAIN CHARCTERISTICS

- 2 speed controlled arm moving system (38 and 52 strokes per minute)
- Small-sized double-arm compact system
- Completely extractable arms to ensure emptying and cleaning operations are easier.
- Double-channel emergency stop system ("Safety Torque Off")
- Touch-system control board
- High torque efficiency induction engine

## SPECIFICATIONS

| | |
|---|---|
| Flour capacity | 3kg - 30kg |
| Kneading capacity | 5kg - 48 kg |
| Bowl capacity | 60 litres |
| Dimensions of bowl | Ø 50 - h 34 |
| Voltage | 230 V single-phase, supplied with a 10 amp plug |
| Power | 1500 W |
| Speed of the arms | 2 speed from 38 & 52 strokes/min |
| Extractable arms | Yes |
| Extractable bowl | No |
| Net weight/packing | 145 kg / 187 kg |
| Color | White |
| Warranty | 2 years parts and labour |

## DIMENSIONS

| | |
|---|---|
| Kneading machine dimensions LxWxH (mm) | 530 x 790 x 960 |
| Dimensions with packaging LxWxH (mm) | 630 X 890 X 1160 |

# BERNARDI RS-48

## FREESTANDING 48KG DOUBLE ARM MIXER

## RS4823029

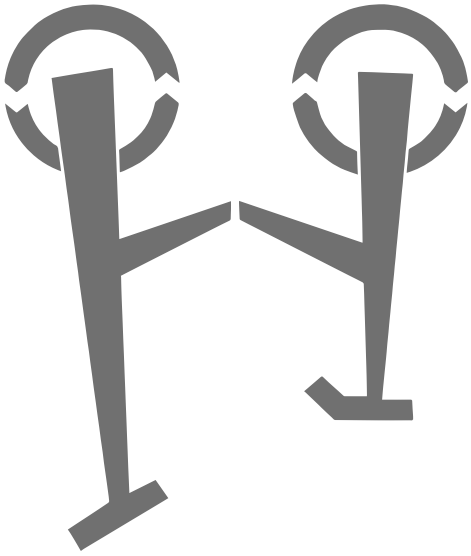

Bernardi patent

- The exclusive compact kneading arm system is a patent of Bernardi.
- This compact system can even makethe most difficult recipes such as large leavened kneading and high-hydration dough.

| DOUGH | BERNARDI |
|---|---|
| BREAD | |
| PIZZA | |
| EGG PASTA | |
| PIZZA NAPOLETANA | |
| FROLLA PASTA | |
| BRIOCHES/VIENNOISERIES | |
| SHORT PASTA | |
| CROISSANTS | |
| PANETTONE | |
| HIGH HYDRATION DOUGH | |

- The maximum kneading capacity refers to a flour/liquid ratio of 1:0.6 and may vary according to the recipe
- The minimum kneading capacity is approximately the 20% of the maximum capacity
- For tough dough - less than 55% hydration - like egg pasta and mother yeast, reduce the maximum capacity of flour by 50%

## FRONT

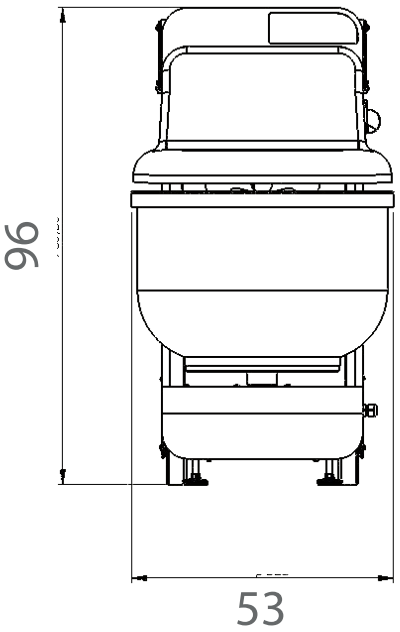


## SIDE

