BERNARDI PIZZAIOLA
FREESTANDING 48KG DOUBLE ARM MIXER
PZ4823099

BERNARDI PIZZAIOLA

The Pizzaiola has been designed with the Professional Pizzaiola needs in mind.

This Compact freestanding double arm kneading machine is especially suitable for pizza dough of all type and bread and utilises a variable speed operation. It perfectly kneads and oxygenates 5kg - 48kg of pizza dough to a standard that praises the highest tradition.

The exclusive patented compact system enables the double arms to adapt to minimal space requirements and offer exceptional performance.

The Pizzaiola Series can perfectly combine medium hydration doughs, even up to 75%.

Pizzaiola



TRY IT AND FALL IN LOVE

MAIN CHARCTERISTICS

- Variable Speed controlled arm moving system (from 35 to 55 strokes per minute)
- Small-sized double-arm compact system
- Completely extractable arms to ensure emptying and cleaning operations are easier.
- Double-channel emergency stop system ("Safety Torque Off")
- Electromechanical control board operation.
- High torque efficiency induction engine

DIMENSIONS

Kneading machine dimensions LxWxH (mm)	530 x 790 x 960
Dimensions with packaging LxWxH (mm)	630 X 890 X 1160

SPECIFICATIONS

Flour capacity	3kg - 30kg
Kneading capacity	5kg - 48 kg
Bowl capacity	60 litres
Dimensions of bowl	Ø 50 - h 34
Voltage	230 V single-phase, supplied with a 10 amp plug
Power	1500 W
Speed of the arms	Variable speed from 35 to 55 strokes/min
Extractable arms	Yes
Extractable bowl	No
Net weight/packing	145 kg / 187 kg
Color	White
Warranty	2 years parts and labour

BERNARDI PIZZAIOLA

FREESTANDING 48KG DOUBLE ARM MIXER

PZ4823099

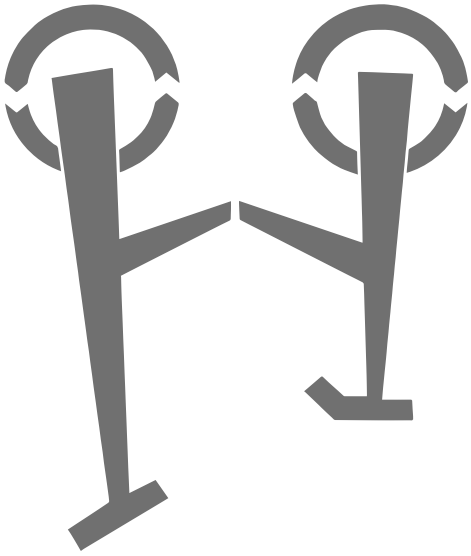

Bernardi patent

- The exclusive compact kneading arm system is a patent of Bernardi.
- This compact system can even makethe most difficult recipes such as large leavened kneading and high-hydration dough.

DOUGH	BERNARDI PIZZAIOLA
BREAD	
PIZZA	
EGG PASTA	
PIZZA NAPOLETANA	
FROLLA PASTA	
BRIOCHES/VIENNOISERIES	
SHORT PASTA	
CROISSANTS	
PANETTONE	
HIGH HYDRATION DOUGH	

- The maximum kneading capacity refers to a flour/liquid ratio of 1:0.6 and may vary according to the recipe
- The minimum kneading capacity is approximately the 20% of the maximum capacity
- For tough dough - less than 55% hydration - like egg pasta and mother yeast, reduce the maximum capacity of flour by 50%

FRONT

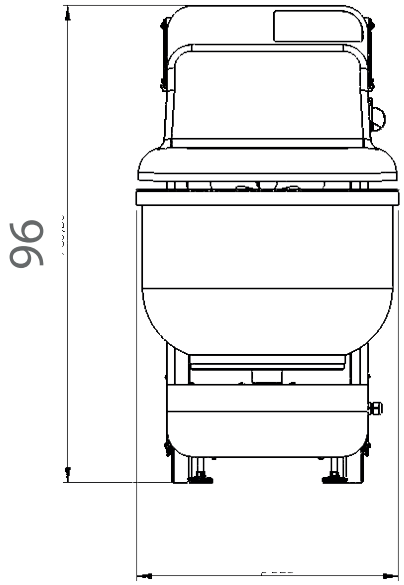

SIDE

