# BERNARDI BTS 24
## FREESTANDING 24KG HEAVY DUTY DOUBLE ARM MIXER
## BT2440059

## BERNARDI BTS24

TRY IT AND FALL IN LOVE

Let yourself be conquered by BTs Range. The BTs range represents the top of line double arm mixer range from Bernardi.

Capable of every kind of dough, the BTs-24 will perfectly knead and oxygenates 3kg to 24kg of dough to a standard that praises the highest tradition. The patented compact system enables the double arms to adapt to minimal space requirements and offer exceptional performance.

Ideal for preparing large quantities of yeast in confectionaries, bread of high hydration, dough for pizza, focaccia, croissants, short pastry, flaky pastry, egg pasta, brioches, panettone and more.

It strings dough with high hydration to perfection, even until 100%.




## MAIN CHARCTERISTICS

- Five-speed inverter-controlled arm moving system (from 35 to 65 strokes per minute)
- Small-sized double-arm compact system
- Completely extractable arms to ensure emptying and cleaning operations are easier.
- Double-channel emergency stop system ("Safety Torque Off")
- Touch-system control board
- High Torque efficiency induction engine
- Bluetooth communication system to use proprietary application "MixDrive" on iOS and Android smartphones
- Reinforced Bowl Heavy Guage Bowl and plates
- 400V three-phase operation

## DIMENSIONS

| | |
|---|---|
| Kneading machine dimensions LxWxH (mm) | 450 x 710 x 910 |
| Dimensions with packaging LxWxH (mm) | 550 X 810 X 1100 |

## SPECIFICATIONS

| | |
|---|---|
| Flour capacity | 2kg - 15kg |
| Kneading capacity | 3kg - 24 kg |
| Bowl capacity | 35 litres |
| Dimensions of bowl | Ø 43 - h 30 |
| Voltage | 400 V three-phase, supplied with a lead only |
| Power | 1500 W |
| Speed of the arms | 5 speed from 35 to 65 strokes/min |
| Extractable arms | Yes |
| Extractable bowl | No |
| Net weight/packing | 140 kg / 165 kg |
| Color | White/Stainless Steel |
| Warranty | 2 years parts and labour |

# BERNARDI BTS 24

## FREESTANDING 24KG HEAVY DUTY DOUBLE ARM MIXER

BT2440059

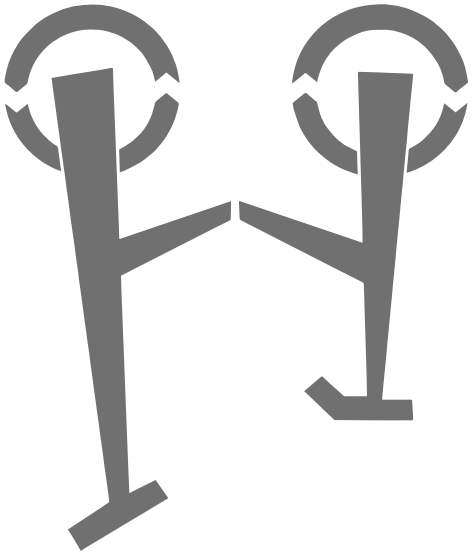

Bernardi patent

- The exclusive compact kneading arm system is a patent of Bernardi.
- This compact system can even makethe most difficult recipes such as large leavened kneading and high-hydration dough.

| DOUGH | BERNARDI BTS 24 |
|---|---|
| BREAD | |
| PIZZA | |
| EGG PASTA | |
| PIZZA NAPOLETANA | |
| FROLLA PASTA | |
| BRIOCHES/VIENNOISERIES | |
| SHORT PASTA | |
| CROISSANTS | |
| PANETTONE | |
| HIGH HYDRATION DOUGH | |

- The maximum kneading capacity refers to a flour/liquid ratio of 1:0.6 and may vary according to the recipe
- The minimum kneading capacity is approximately the 20% of the maximum capacity
- For tough dough - less than 55% hydration - like egg pasta and mother yeast, reduce the maximum capacity of flour by 50%

## FRONT

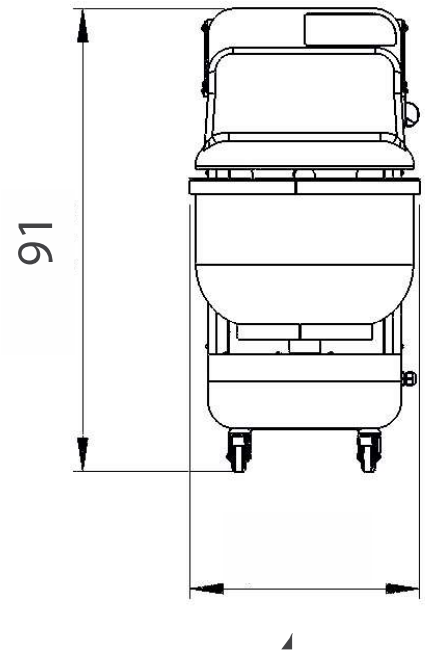


## SIDE

