DATA SHEET

Baratta W-600R Tilting 600 litre Vegetable Washer

456101570

Build

- Constructed entirely from high-grade AISI 304 stainless steel, ensuring longevity, hygiene, and suitability for intensive use in professional kitchens and food processing facilities.
- Capable of washing a wide range of foods, including leafy vegetables, sturdy vegetables, fruits, fish, and poultry.
- 600-liter AISI stainless steel washing tank with both a drain and an overflow.
- 350-liter Tiltable heavy-gauge AISI stainless steel washing drum basket is easily removable. The tiltable washing tank allows for effortless product emptying, enhancing ease of use and productivity.
- The tilting mechanism operates with a two-hand control via an actuator, ensuring safe operation.
- The tilting mechanism is driven by a heavy-duty gear drive, providing reliable performance and durability.
- Standard electronic phase control with a safety lamp ensures reliable operation and enhances safety during use.
- A potentiometer controls vortex speed, adjusting washing intensity for various food types. Washing flow and water speed are electronically adjustable for a customizable experience.
- Powerful Hydraulic pump circulates clean water to maintain optimal cleanliness.
- Fast washing times of 2 to 4 minutes are achieved through powerful water circulation and efficient clean water discharge.
- Timer control enables autonomous operation, allowing the washer to complete its cycle automatically once a timed program finishes.
- Clean water can be added manually or automatically, or through a timed water discharge program for continuous clean water change.
- Water flows in a centrifugal motion to effectively remove dirt particles, which are expelled through strategically placed holes.
- Automatic water levels are managed via level probes for convenience.
- Designed with durable electro-mechanical components for easy repairs and reliable functionality. Positioned above the unit, it ensures easy cleaning and safe sanitization, enhancing hygiene and usability.
- Backed by over 40 years of industry experience and thousands of successful installations.



Technical specifications

External Size

External Width	1800mm
External Depth	950mm
External Height	1280mm

Weight

Net weight	
package weight	

Technical Features

Tank capacity	600Lt
Basket Capacity	350Lt

Connection requirements electric

Electrical connected loads	1.90kW
Voltage	400/3+N/50
Plug Supplied	No

Warranty

2 Year Warranty	2 years parts and labour

**Subject to a prevanttitive maintence plan*

DATA SHEET

Baratta W-600R Tilting 600 litre Vegetable Washer

456101570

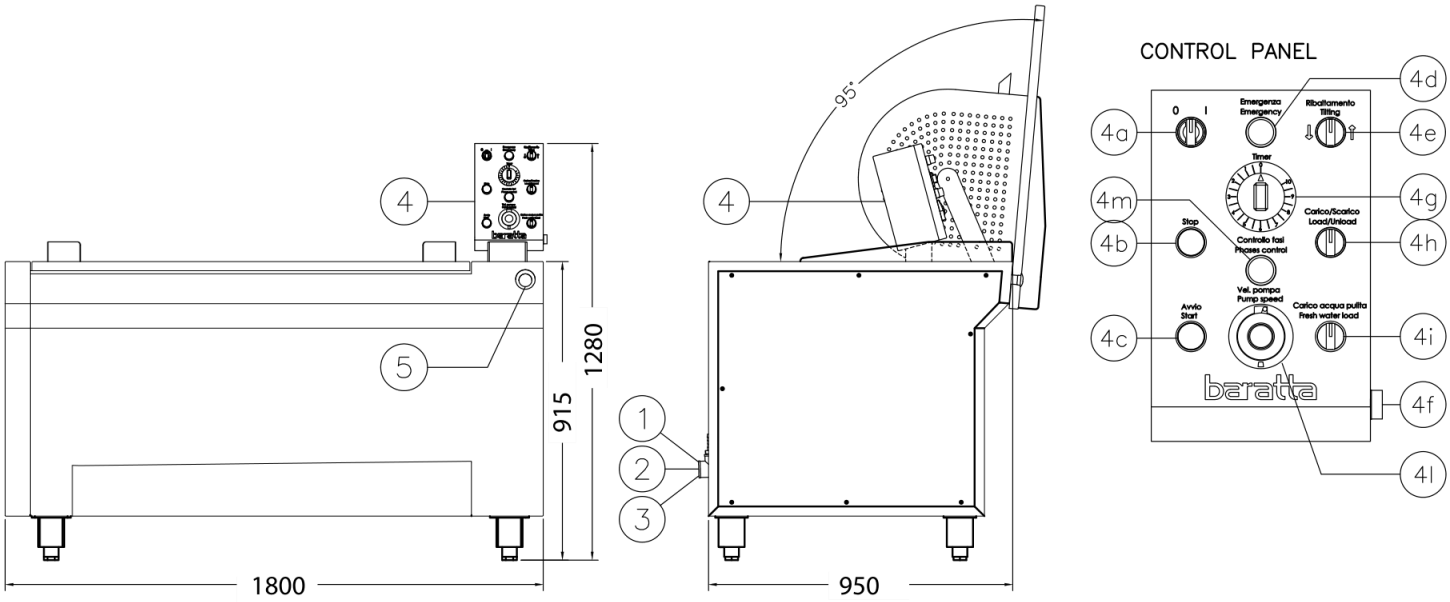

1	Drain 50mm
2	Water connection
3	Cord connector
4	Control panel
4a	Main switch
4b	Stop
4c	Washing cycle start
4d	Emergency pilot lamp

4e	Tilting selector
4f	Tilting button
4g	Timer
4h	Load/Unload selector
4i	Fresh water load
4l	Water wash speed regulator
4m	Phases control lamp
5	Emergency stop