# DATA SHEET

## Baratta W-235 Stationary 235 litre Vegetable Washer

456101500

### Build

- Constructed entirely from high-grade AISI 304 stainless steel, ensuring longevity, hygiene, and suitability for intensive use in professional kitchens and food processing facilities.
- Capable of washing a wide range of foods, including leafy vegetables, sturdy vegetables, fruits, fish, and poultry.
- 235-liter AISI stainless steel washing tank with both a drain and an overflow.
- 125-liter Stationary heavy-gauge AISI stainless steel washing drum basket is easily removable.
- A potentiometer controls vortex speed, adjusting washing intensity for various food types. Washing flow and water speed are electronically adjustable for a customizable experience.
- Powerful Hydraulic pump circulates clean water to maintain optimal cleanliness.
- Fast washing times of 2 to 4 minutes are achieved through powerful water circulation and efficient clean water discharge.
- Timer control enables autonomous operation, allowing the washer to complete its cycle automatically once a timed program finishes.
- Clean water can be added manually or automatically, or through a timed water discharge program for continuous clean water change.
- Water flows in a centrifugal motion to effectively remove dirt particles, which are expelled through strategically placed holes.
- Automatic water levels are managed via level probes for convenience.
- Designed with durable electro-mechanical components for easy repairs and reliable functionality. Positioned above the unit, it ensures easy cleaning and safe sanitization, enhancing hygiene and usability.
- Backed by over 40 years of industry experience and thousands of successful installations.



### Technical specifications

**External Size**

| | |
|---|---|
| External Width | 600mm |
| External Depth | 900mm |
| External Height | 1250mm |

**Weight**

| | |
|---|---|
| Net weight | |
| package weight | |

**Technical Features**

| | |
|---|---|
| Tank capacity | 235Lt |
| Basket capacity | 125Lt |

**Connection requirements electric**

| | |
|---|---|
| Electrical connected loads | 1.10kW |
| Voltage | 400/3+N/50 |
| Plug Supplied | No |

**Warranty**

| | |
|---|---|
| **2 Year Warranty** | 2 years parts and labour |

**Subject to a prevanttitive maintence plan*

# DATA SHEET

## Baratta W-235 Stationary 235 litre Vegetable Washer

456101500

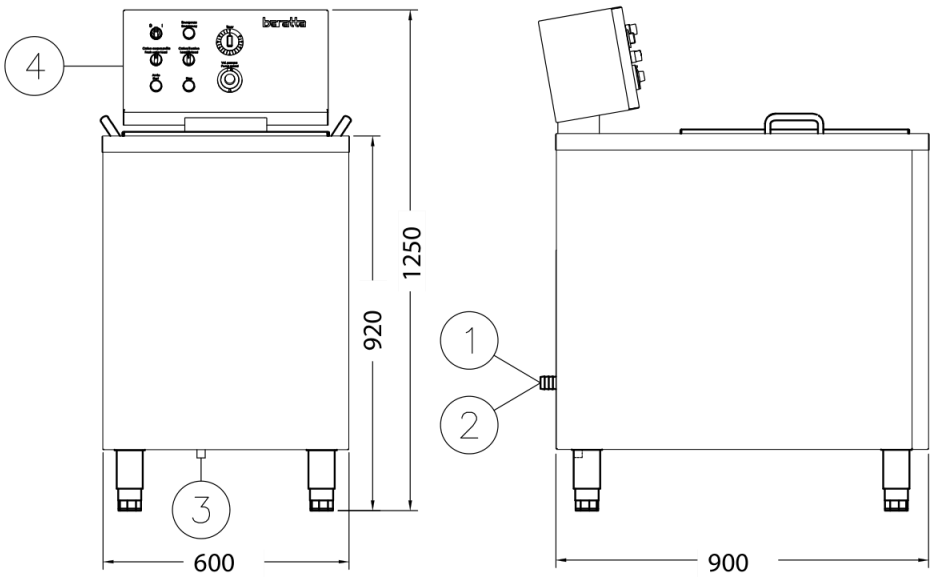


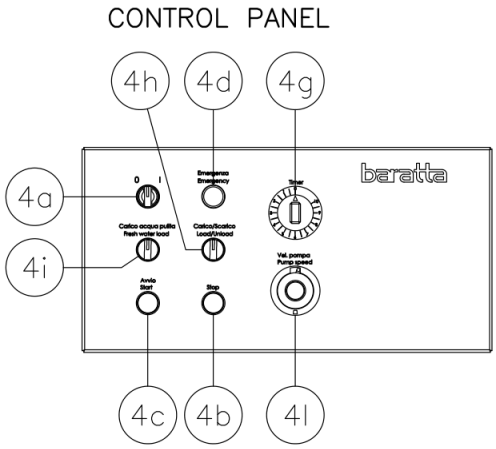


| | |
|---|---|
| 1 | Drain 50mm |
| 2 | Water connection |
| 3 | Cord connector |
| 4 | Control panel |
| 4a | Main switch |
| 4b | Stop |

| | |
|---|---|
| 4c | Washing cycle start |
| 4d | Emergency pilot lamp |
| 4g | Timer |
| 4i | Fresh water load |
| 4l | Water wash speed regulator |