DATA SHEET

Baratta PEIME-80 Indirect Electric 80 litre Jacketed Boiling Pan with Auto Mixing | Auto Tank Tilt

453116050

Build

- Heavy-duty robust construction built entirely from heavy gauge AISI 304 / 316 stainless steel and designed for intensive industrial use.
- Constructed with the highest quality materials and compo-nents, ensuring longevity, ease of maintenance, and adherence to the highest hygiene standards for cleaning and sanitization
- Designed and constructed with best-in-class insulation layers that minimize heat loss, optimize energy efficiency, and enhance cooking yield
- Heavy duty 80 litre Jacketed Tank constructed entirely from heavy-gauge AISI 316 stainless steel.
- Thick-Rayed AISI 316 stainless steel bottom base enhances thermal efficiency and stability, ensuring optimal heat distribution and durability during intensive use.
- Heavy-gauge AISI 304 stainless steel lid equipped with a special device for balanced weight, ensuring effortless opening.
- Electric tank tilting mechanism powered by a robust gear motor, enabling effortless emptying of the tank.
- Heavy-duty AISI 316 stainless steel mixing arms with food-grade Teflon scrapers on the bottom and walls of the tank. These mixing arms ensure seamless mixing, prevent food adhesion, and operate autonomously without user intervention.
- The mixing arms are controlled by a speed regulation knob, offering full variable speed capabilities. Powered by a durable variable-speed direct drive motor with an inverter, it supports a wide range of cooking applications and includes a reverse function for added versatility.
- Indirect electric heating system powered by 14.8 kW armored heating elements heats the water in the jacketed wall cavity, generating steam for even heat distribution while minimizing food sticking, ensuring perfect cooking results.
- Water jacket equipped with a safety pressure relief valve and manometer for monitoring pressure levels, with a pressure gauge set to 0.45 bar, ensuring optimal operation and safety
- Automatic water loading system prevents the tank from running dry, safeguarding against any potential damage.
- Maximum and minimum water level jacket valves are fitted to regulate the distilled water level within the water jacket, which is automatically topped up by the standard automatic water loading device.
- Electronic bottom thermostat control with safety level regulates temperatures from 30°C to 105°C.
- Electronic core probe temperature control in the tank ensures precise regulation of product temperature throughout the cooking process
- Safety thermostat ensures added protection during operation.
- IP54 water protection rating safeguards the Boiling pan against dust and water splashes, making it suitable for various kitchen environments.
- Safety lamp alerts operators if any electrical phase issues occur ensuring enhanced safety.
- Durable electromechanical control panel enables precise programming of cooking functions, including thermostat adjustments, core product temperature control for precision cooking, cooking times, tank tilting, and mixer arm rotation speeds. Simple and intuitive, controls are positioned above the unit for easy cleaning, reliability, and user-friendly operation.
- Acoustic alert signals the completion of a programmed cooking cycle
- Extensive range of options and accessories to meet the every possible application.
- Backed by over 50 years of industry experience, Baratta continually innovates to exceed standards for strength, functionality, and maintenance, affirming its leadership in



Technical specifications

External Size

External Width	1320mm
External Depth	1015mm
External Height	900mm

Weight

Net weight	
package weight	

Technical Features

Tank Capacity	80 Lt
Tank Tilt Type	Automatic
Lid Lift Type	Manual
Control Type	Electromechanical
Temperature	30°C to 105°C

Connection requirements electric

Electrical connected loads	14.8 Kw
Voltage	400/3+N/50
Plug Supplied	No

Connection requirements Water

Water Jacket Drain	1/2 " F
Cold Water Connection	1/2" M
Hot Water Connection	1/2" M

Build Inclusions

Water jacket air exhaust system *(Model: SAI SKU: 456131170)*	✓
Automatic Water Loading *(Model: CAI SKU: 456131140)*	✓
Core Tank Probe *(Model: STC-P SKU: 456131120)*	✓
Core Temperature Probe *(Model: HP1 SKU: 456131240)*	✓
Safety Valve Group inluding:	✓
-Water Jacket Water Connection	✓
-Depression Valve	✓
-Safety Valve	✓
- Manometer	✓

Warranty

2 Year Warranty	2 years parts and labour

**Subject to a prevanttitive maintence plan*

DATA SHEET

Baratta PEIME-80 Indirect Electric 80 litre Jacketed Boiling Pan with Auto Mixing | Auto Tank Tilt

453116050

Options

Leg Option

☐	Lockable Wheel Set	
	Model: KR-4	SKU: 456131030
☐	Adjustable Flanged Feet	
	Model: PFT-2	SKU: 456131016



Hand Shower

☐	Hand Shower External	
	Model: DES	SKU: 456131228
☐	Hand Shower Retractible	
	Model: DFS	SKU: 456131230



Drain Filter

☐	Drain Filter for tank ø 600 mm	
	Model: FS-60	SKU: 456131205



Drain Tap

☐	2" Drain Tap	
	Model: MDS-1	SKU: 456131245
☐	Washout Valve 2'' DIN50 Connection	
	Model: DS2-50	SKU: 456131251

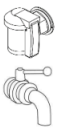

Lid Options

☐	Lid Hole with Grid	
	Model: CCI	SKU: 456130850
☐	Insulated Cover Ø 600 mm	
	Model: CCI-60	SKU: 456130815

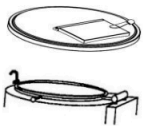

Mixing Options

☐	Mixer for Mashed Potatoes	
	Model: MPP-80R	SKU: 457010120
☐	Mixer for Creams	
	Model: MPC-80R	SKU: 457010200
☐	Mixer for Solid Parts	
	Model: MPS-80R	SKU: 457010240

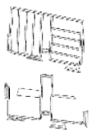

Control Panel Cover

☐	Control Panel Cover	
	Model: CPC	SKU: 456131135

DATA SHEET

Baratta PEIME-80 Indirect Electric 80 litre Jacketed Boiling Pan with Auto Mixing | Auto Tank Tilt

453116050

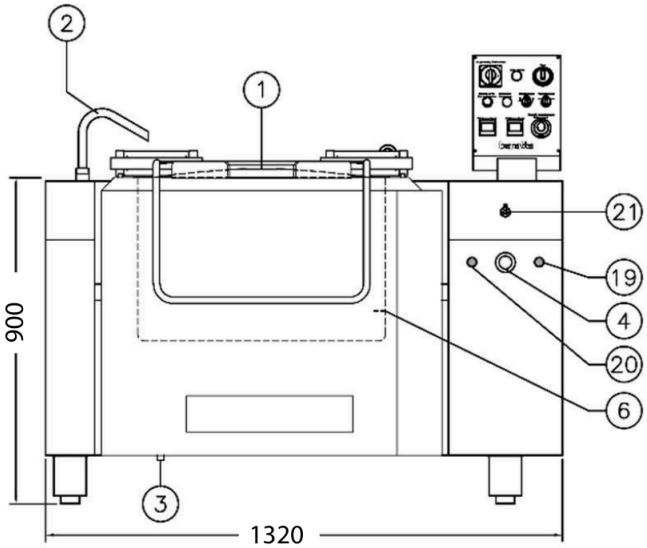

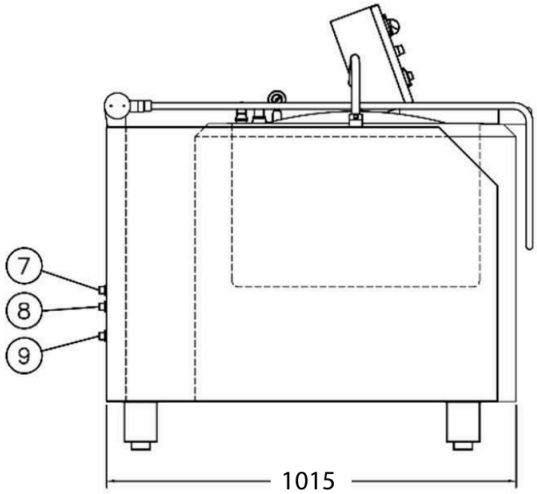

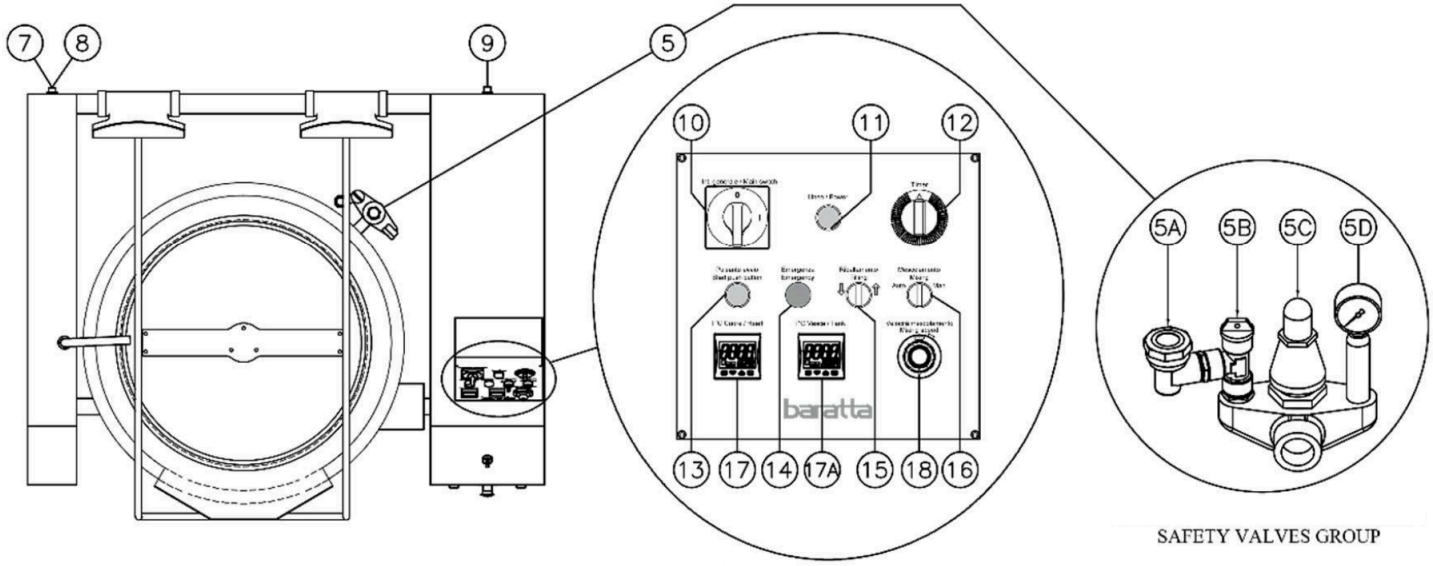

CONTROL PANEL

SAFETY VALVES GROUP

1	Lid
2	Tank water filler spout
3	Water jacket drain 1/2 " F
4	Emergency stop
5	Safety valve group
5a	Automatic water jacket air discharge vavle
5b	Water jacket water manual load
5c	Safety valve
5d	Manometer
6	Heart probe
7	Cold water connection 1/2 " M
8	Hot water connection 1/2 " M
9	Cord connector

10	Main switch
11	Power on pilot lamp
12	Timer
13	Push button start
14	Electric alarm pilot lamp
15	Tilting selector
16	Mixing selector
17	Heart probe thermostat
17a	Safety thermostat
18	Speed mixing regulator
19	Phase control lamp
20	Warning lamp water jacket low water level
21	Tank water load selector