# DATA SHEET

## Baratta PEIME-150 Indirect Electric 155 litre Jacketed Boiling Pan with Auto Mixing | Auto Tank Tilt

453116090

## Build

- Heavy-duty robust construction built entirely from heavy gauge AISI 304 / 316 stainless steel and designed for intensive industrial use.
- Constructed with the highest quality materials and compo-nents, ensuring longevity, ease of maintenance, and adherence to the highest hygiene standards for cleaning and sanitization
- Designed and constructed with best-in-class insulation layers that minimize heat loss, optimize energy efficiency, and enhance cooking yield
- Heavy duty 155 litre Jacketed Tank constructed entirely from heavy-gauge AISI 316 stainless steel.
- Thick-Rayed AISI 316 stainless steel bottom base enhances thermal efficiency and stability, ensuring optimal heat distribution and durability during intensive use.
- Heavy-gauge AISI 304 stainless steel lid equipped with a special device for balanced weight, ensuring effortless opening.
- Electric tank tilting mechanism powered by a robust gear motor, enabling effortless emptying of the tank.
- Heavy-duty AISI 316 stainless steel mixing arms with food-grade Teflon scrapers on the bottom and walls of the tank. These mixing arms ensure seamless mixing, prevent food adhesion, and operate autonomously without user intervention.
- The mixing arms are controlled by a speed regulation knob, offering full variable speed capabilities. Powered by a durable variable-speed direct drive motor with an inverter, it supports a wide range of cooking applications and includes a reverse function for added versatility.
- Indirect electric heating system powered by 24.8 kW armored heating elements heats the water in the jacketed wall cavity, generating steam for even heat distribution while minimizing food sticking, ensuring perfect cooking results.
- Water jacket equipped with a safety pressure relief valve and manometer for monitoring pressure levels, with a pressure gauge set to 0.45 bar, ensuring optimal operation and safety
- Automatic water loading system prevents the tank from running dry, safeguarding against any potential damage.
- Maximum and minimum water level jacket valves are fitted to regulate the distilled water level within the water jacket, which is automatically topped up by the standard automatic water loading device.
- Electronic bottom thermostat control with safety level regulates temperatures from 30°C to 105°C.
- Electronic core probe temperature control in the tank ensures precise regulation of product temperature throughout the cooking process
- Safety thermostat ensures added protection during operation.
- IP54 water protection rating safeguards the Boiling pan against dust and water splashes, making it suitable for various kitchen environments.
- Safety lamp alerts operators if any electrical phase issues occur ensuring enhanced safety.
- Durable electromechanical control panel enables precise programming of cooking functions, including thermostat adjustments, core product temperature control for precision cooking, cooking times, tank tilting, and mixer arm rotation speeds. Simple and intuitive, controls are positioned above the unit for easy cleaning, reliability, and user-friendly operation.
- Acoustic alert signals the completion of a programmed cooking cycle
- Extensive range of options and accessories to meet the every possible application.
- Backed by over 50 years of industry experience, Baratta continually innovates to exceed standards for strength, functionality, and maintenance, affirming its leadership in



## Technical specifications

**External Size**

| | |
|---|---|
| External Width | 1440mm |
| External Depth | 1215mm |
| External Height | 1070mm |

**Weight**

| | |
|---|---|
| Net weight | |
| package weight | |

**Technical Features**

| | |
|---|---|
| Tank Capacity | 155 Lt |
| Tank Tilt Type | Automatic |
| Lid Lift Type | Manual |
| Control Type | Electromechanical |
| Temperature | 30°C to 105°C |

**Connection requirements electric**

| | |
|---|---|
| Electrical connected loads | 24.8 kW |
| Voltage | 400/3+N/50 |
| Plug Supplied | No |

**Connection requirements Water**

| | |
|---|---|
| Water Jacket Drain | 1/2 " F |
| Cold Water Connection | 1/2" M |
| Hot Water Connection | 1/2" M |

**Build Inclusions**

| | |
|---|---|
| Water jacket air exhaust system *(Model: SAI SKU: 456131170)* | ✓ |
| Automatic Water Loading *(Model: CAI SKU: 456131140)* | ✓ |
| Core Tank Probe *(Model: STC-P SKU: 456131120)* | ✓ |
| Core Temperature Probe *(Model: HP1 SKU: 456131240)* | ✓ |
| Safety Valve Group inluding: | ✓ |
| -Water Jacket Water Connection | ✓ |
| -Depression Valve | ✓ |
| -Safety Valve | ✓ |
| - Manometer | ✓ |

**Warranty**

| | |
|---|---|
| **2 Year Warranty** | 2 years parts and labour |

# DATA SHEET

## Baratta PEIME-150 Indirect Electric 155 litre Jacketed Boiling Pan with Auto Mixing | Auto Tank Tilt

453116090

## Options

### Leg Options

| | | |
|---|---|---|
| ☐ | Lockable Wheel Set | |
| | Model: KR-4 | SKU: 456131030 |
| ☐ | Adjustable Flanged Feet | |
| | Model: PFT-2 | SKU: 456131016 |



### Hand Shower

| | | |
|---|---|---|
| ☐ | Hand Shower External | |
| | Model: DES | SKU: 456131228 |
| ☐ | Hand Shower Retractible | |
| | Model: DFS | SKU: 456131230 |



### Drain Filter

| | | |
|---|---|---|
| ☐ | Drain Filter for tank ø 600 mm | |
| | Model: FS-60 | SKU: 456131205 |



### Drain Tap

| | | |
|---|---|---|
| ☐ | 2" Drain Tap | |
| | Model: MDS-1 | SKU: 456131245 |
| ☐ | Washout Valve 2'' DIN50 Connection | |
| | Model: DS2-50 | SKU: 456131251 |

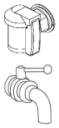

### Lid Options

| | | |
|---|---|---|
| ☐ | Lid Hole with Grid | |
| | Model: CCI | SKU: 456130850 |
| ☐ | Insulated Cover Ø 600 mm | |
| | Model: CCI-60 | SKU: 456130815 |

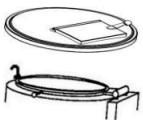

### Mixing Options

| | | |
|---|---|---|
| ☐ | Mixer for Mashed Potatoes | |
| | Model: MPP-150R | SKU: 457010126 |
| ☐ | Mixer for Creams | |
| | Model: MPC-150R | SKU: 457010206 |
| ☐ | Mixer for Solid Parts | |
| | Model: MPS-150R | SKU: 457010246 |

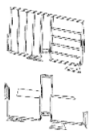

### Control Panel Cover

| | | |
|---|---|---|
| ☐ | Control Panel Cover | |
| | Model: CPC | SKU: 456131135 |

# DATA SHEET

## Baratta PEIME-150 Indirect Electric 155 litre Jacketed Boiling Pan with Auto Mixing | Auto Tank Tilt

453116090

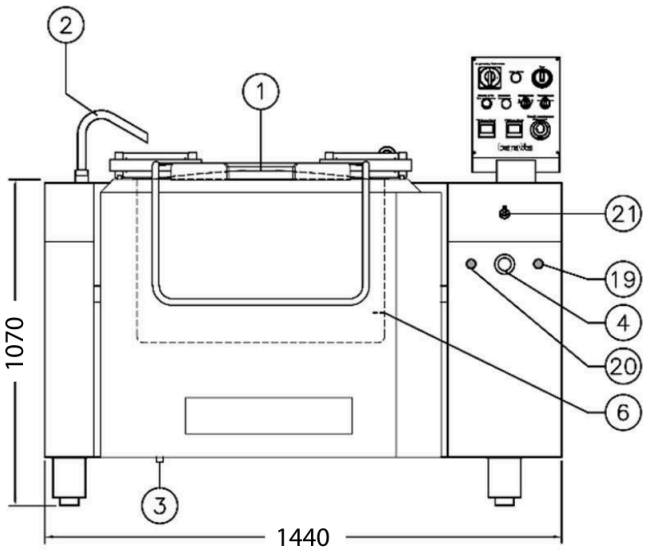


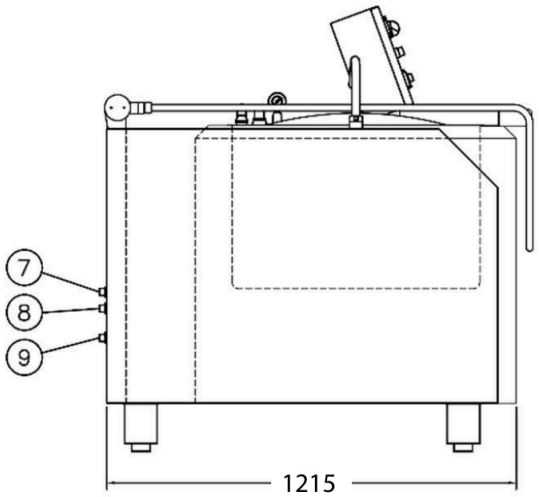


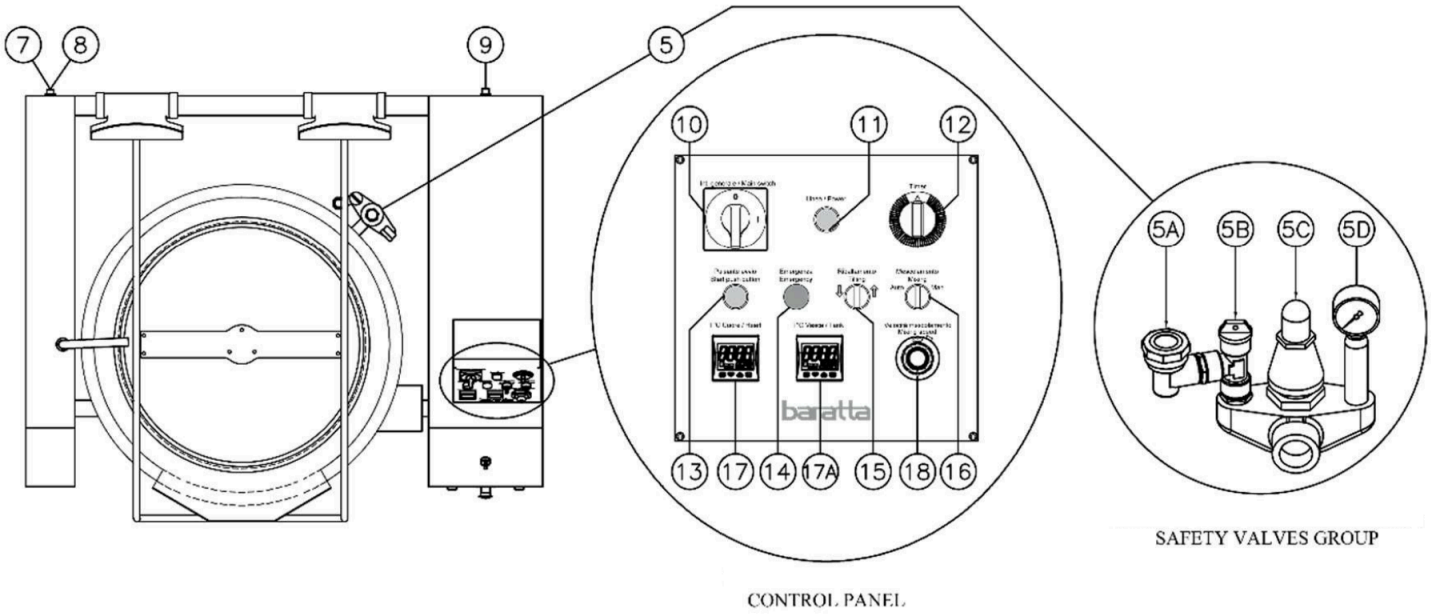


CONTROL PANEL

SAFETY VALVES GROUP

| | |
|---|---|
| 1 | Lid |
| 2 | Tank water filler spout |
| 3 | Water jacket drain 1/2 " F |
| 4 | Emergency stop |
| 5 | Safety valve group |
| 5a | Automatic water jacket air discharge vavle |
| 5b | Water jacket water manual load |
| 5c | Safety valve |
| 5d | Manometer |
| 6 | Heart probe |
| 7 | Cold water connection 1/2 " M |
| 8 | Hot water connection 1/2 " M |
| 9 | Cord connector |

| | |
|---|---|
| 10 | Main switch |
| 11 | Power on pilot lamp |
| 12 | Timer |
| 13 | Push button start |
| 14 | Electric alarm pilot lamp |
| 15 | Tilting selector |
| 16 | Mixing selector |
| 17 | Heart probe thermostat |
| 17a | Safety thermostat |
| 18 | Speed mixing regulator |
| 19 | Phase control lamp |
| 20 | Warning lamp water jacket low water level |
| 21 | Tank water load selector |