DATA SHEET

Baratta CPER2-150 Electric Double Tank 150 + 150 Litre Bulk Cooker with Double Basket Auto Lift

453120100

Build

- Engineered for the rigorous demands of industrial kitchens and food processing facilities, offering versatile cooking capabilities for pasta, rice, vegetables, chicken, and fish.
- Fully automatic functionality with a timer that lifts the baskets at the end of the cooking cycle, including a stop during the dripping phase.
- Intuitive design enhances workflow efficiency with autonomous operation through timer-controlled basket lift.
- Tilting basket mechanism operated by a two-hand control actuator for safety and ease of use.
- Robust construction with main frame and external panels made from thick AISI 304 stainless steel.
- Two independent 150 Litre + 150 Litre tanks each crafted from 4mm thick marine-grade AISI 316 stainless steel for exceptional durability.
- Removable baskets made from AISI 316 stainless steel for easy cleaning and maintenance, featuring slotted perforations for quick drainage.
- Independent Heavy-gauge lids made from AISI 304 stainless steel with a balancing device for easy opening and heat retention.
- EachTank features an overflow and starch drain for efficient water management.
- Control panel offers both automatic and manual clean water inlets to expel excess starch.
- Automatic water level control and machine lock prevent operation during water shortages for safe cooking.
- Equipped with a 2-inch chrome-plated brass drain cock with insulated handle per tank for straightforward drainage.
- Powerful 33kW electric direct armored heating elements independently controlled per tank at 16.5 kW + 16.5 kW for precise temperature management.
- Electronic cooking water temperature control thermostat for great temperature recovery and adjustable water temperatures.
- Safety features include an electronic phase control system with a safety lamp for reliable operation.
- Best-in-class insulation layers minimize heat loss while optimizing energy consumption.
- Durable electro-mechanical independent control panels facilitate straightforward repairs, ideal for busy, around-the-clock environments.
- IP44 rated for protection against water and dust, ensuring reliable performance of all machine functions.



Technical specifications

External Size

External Width	1700mm
External Depth	900mm
External Height	940mm

Weight

Net weight	
package weight	

Technical Features

Tank capacity	150Lt + 150Lt
Tank Configuration	Double Tank
Basket Configuration	Double Basket
Basket capacity	15/18kg + 15/18kg

Connection requirements electric

Electrical connected loads	16.5kW + 16.5kW
Voltage	400-415/3+N/50
Plug Supplied	No

Build Inclusions

2" front Drain valve	✓

Warranty

2 Year Warranty	2 years parts and labour

**Subject to a prevanttitive maintence plan*

DATA SHEET

Baratta CPER2-150 Electric Double Tank 150 + 150 Litre Bulk Cooker with Double Basket Auto Lift

453120100

Options

Leg Options

☐	Lockable Wheel Set	
	Model: KR-4	SKU: 456131030
☐	Flanged Feet	
	Model: FFM	SKU: 456131200

Drain Tap

☐	Upgrade to Washout Valve 2'' DIN50 Connection	
	Model: DS-2	SKU: 456131250

Hand Shower

☐	Hand Shower External	
	Model: DES	SKU: 456131228

Drain Tank

☐	Via solenoid valve, w/out manual washout valve	
	Model: SVC-E	SKU: 456131180

DATA SHEET

Baratta CPER2-150 Electric Double Tank 150 + 150 Litre Bulk Cooker with Double Basket Auto Lift

453120100

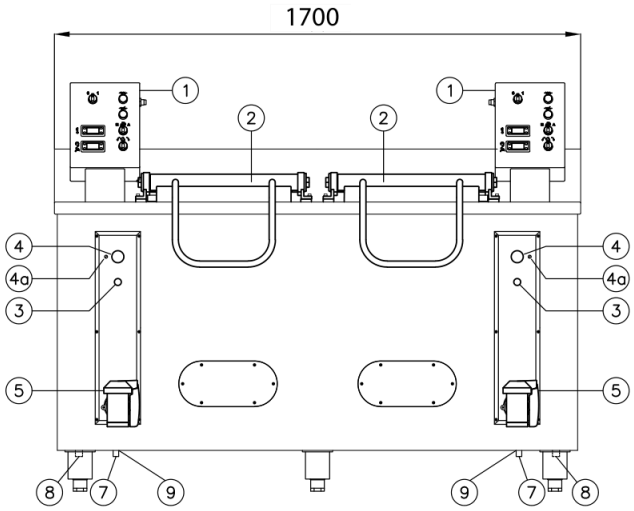

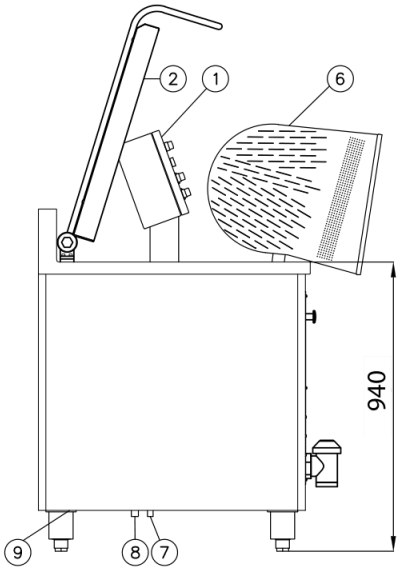

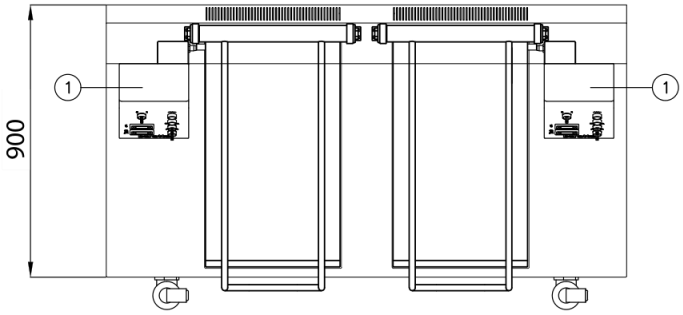

1	Control panel
2	Lid
3	Phases control lamp
4	Emergency stop
4a	Safety thermostat

5	Drain tap 2”
6	Basket
7	Cold water connection 1/2” M
8	Cord connector
9	Overflow drain