DATA SHEET

Baratta CPER-300 Electric Single Tank 300 litre Bulk Cooker with Single Basket Auto Lift

453118150

Build

- Engineered for the rigorous demands of industrial kitchens and food processing facilities, offering versatile cooking capabilities for pasta, rice, vegetables, chicken, and fish.
- Fully automatic functionality with a timer that lifts the basket at the end of the cooking cycle, including a stop during the dripping phase.
- Intuitive design enhances workflow efficiency with autonomous operation through timer-controlled basket lift.
- Tilting basket mechanism operated by a two-hand control actuator for safety and ease of use.
- Robust construction with main frame and external panels made from thick AISI 304 stainless steel.
- 300-litre tank crafted from 4mm thick marine-grade AISI 316 stainless steel for exceptional durability.
- Removable basket made from AISI 316 stainless steel for easy cleaning and maintenance, featuring slotted perforations for quick drainage.
- Heavy-gauge lid made from AISI 304 stainless steel with a balancing device for easy opening and heat retention.
- Tank features an overflow and starch drain for efficient water management.
- Control panel offers both automatic and manual clean water inlets to expel excess starch.
- Automatic water level control and machine lock prevent operation during water shortages for safe cooking.
- Equipped with a 2-inch chrome-plated brass drain cock with insulated handle for straightforward drainage.
- Powerful 36.5 kW electric direct armored heating elements for precise temperature management.
- Electronic cooking water temperature control thermostat for great temperature recovery and adjustable water temperatures.
- Safety features include an electronic phase control system with a safety lamp for reliable operation.
- Best-in-class insulation layers minimize heat loss while optimizing energy consumption.
- Durable electro-mechanical control panel facilitates straightforward repairs, ideal for busy, around-the-clock environments.
- IP44 rated for protection against water and dust, ensuring reliable performance of all machine functions.



Technical specifications

External Size

External Width	1350mm
External Depth	900mm
External Height	940mm

Weight

Net weight	
package weight	

Technical Features

Tank capacity	300Lt
Tank Configuration	Single Tank
Basket Configuration	Single Basket
Basket capacity	30/35kg

Connection requirements electric

Electrical connected loads	36.5kW
Voltage	400-415/3+N/50
Plug Supplied	No

Build Inclusions

2" front Drain valve	✓

Warranty

2 Year Warranty	2 years parts and labour

**Subject to a prevanttitive maintence plan*

DATA SHEET

Baratta CPER-300 Electric Single Tank 300 litre Bulk Cooker with Single Basket Auto Lift

453118150

Options

Leg Options

☐	Lockable Wheel Set	
	Model: KR-4 SKU: 456131030	
☐	Flanged Feet	
	Model: FFM SKU: 456131200	

Drain Tap

☐	Upgrade to Washout Valve 2'' DIN50 Connection	
	Model: DS-2 SKU: 456131250	

Hand Shower

☐	Hand Shower External	
	Model: DES SKU: 456131228	

Drain Tank

☐	Via solenoid valve, w/out manual washout valve	
	Model: SVC-E SKU: 456131180	

DATA SHEET

Baratta CPER-300 Electric Single Tank 300 litre Bulk Cooker with Single Basket Auto Lift

453118150

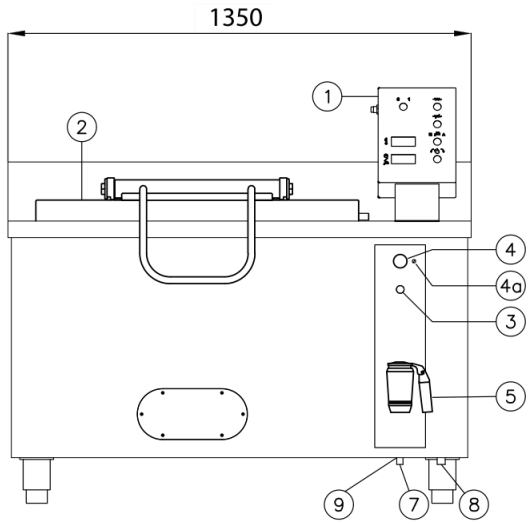

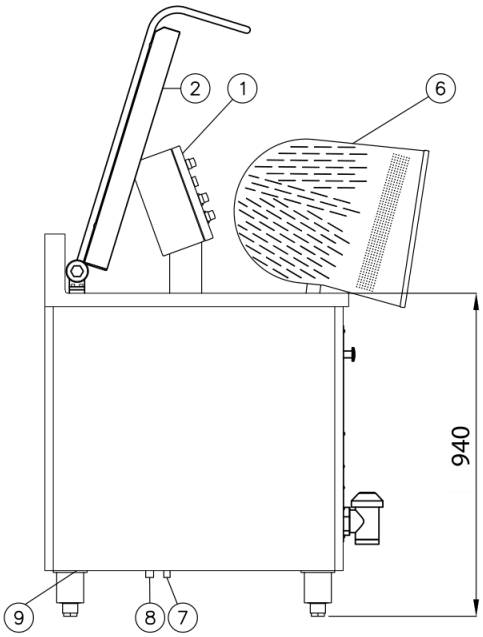

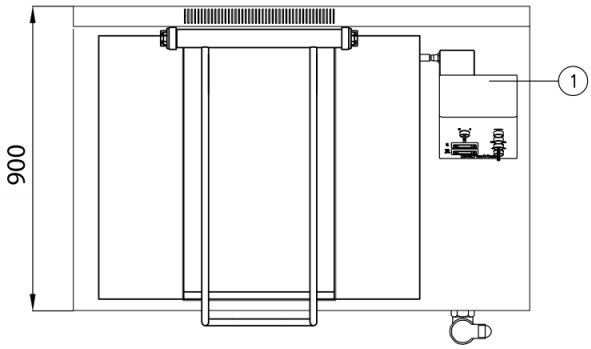

1	Control panel
2	Lid
3	Phases control lamp
4	Emergency stop
4a	Safety thermostat

5	Drain tap 2”
6	Basket
7	Cold water connection 3/4” M
8	Cord connector
9	Overflow drain