# DATA SHEET

## Baratta CPER-100 Electric Single Tank 110 litre Bulk Cooker with Single Basket Auto Lift

453118050

## Build

- Engineered for the rigorous demands of industrial kitchens and food processing facilities, offering versatile cooking capabilities for pasta, rice, vegetables, chicken, and fish.
- Fully automatic functionality with a timer that lifts the basket at the end of the cooking cycle, including a stop during the dripping phase.
- Intuitive design enhances workflow efficiency with autonomous operation through timer-controlled basket lift.
- Tilting basket mechanism operated by a two-hand control actuator for safety and ease of use.
- Robust construction with main frame and external panels made from thick AISI 304 stainless steel.
- 110-litre tank crafted from 4mm thick marine-grade AISI 316 stainless steel for exceptional durability.
- Removable basket made from AISI 316 stainless steel for easy cleaning and maintenance, featuring slotted perforations for quick drainage.
- Heavy-gauge lid made from AISI 304 stainless steel with a balancing device for easy opening and heat retention.
- Tank features an overflow and starch drain for efficient water management.
- Control panel offers both automatic and manual clean water inlets to expel excess starch.
- Automatic water level control and machine lock prevent operation during water shortages for safe cooking.
- Equipped with a 2-inch chrome-plated brass drain cock with insulated handle for straightforward drainage.
- Powerful 12.5 kW electric direct armored heating elements for precise temperature management.
- Electronic cooking water temperature control thermostat for great temperature recovery and adjustable water temperatures.
- Safety features include an electronic phase control system with a safety lamp for reliable operation.
- Best-in-class insulation layers minimize heat loss while optimizing energy consumption.
- Durable electro-mechanical control panel facilitates straightforward repairs, ideal for busy, around-the-clock environments.
- IP44 rated for protection against water and dust, ensuring reliable performance of all machine functions.



## Technical specifications

**External Size**

| | |
|---|---|
| External Width | 800mm |
| External Depth | 900mm |
| External Height | 940mm |

**Weight**

| | |
|---|---|
| Net weight | |
| package weight | |

**Technical Features**

| | |
|---|---|
| Tank capacity | 110Lt |
| Tank Configuration | Single Tank |
| Basket Configuration | Single Basket |
| Basket capacity | 10/12kg |

**Connection requirements electric**

| | |
|---|---|
| Electrical connected loads | 12.5kW |
| Voltage | 400-415/3+N/50 |
| Plug Supplied | No |

**Build Inclusions**

| | |
|---|---|
| 2" front Drain valve | ✔ |

**Warranty**

| | |
|---|---|
| **2 Year Warranty** | 2 years parts and labour |

**Subject to a prevanttitive maintence plan*

# DATA SHEET

## Baratta CPER-100 Electric Single Tank 110 litre Bulk Cooker with Single Basket Auto Lift

453118050

## Options

**Leg Options**

| | | |
|---|---|---|
| ☐ | Lockable Wheel Set |  |
| | Model: KR-4 SKU: 456131030 | |
| ☐ | Flanged Feet |  |
| | Model: FFM SKU: 456131200 | |

**Drain Tap**

| | | |
|---|---|---|
| ☐ | Upgrade to Washout Valve 2" DIN50 Connection |  |
| | Model: DS-2 SKU: 456131250 | |

**Hand Shower**

| | | |
|---|---|---|
| ☐ | Hand Shower External |  |
| | Model: DES SKU: 456131228 | |

**Drain Tank**

| | | |
|---|---|---|
| ☐ | Via solenoid valve, w/out manual washout valve | |
| | Model: SVC-E SKU: 456131180 | |

# DATA SHEET

## Baratta CPER-100 Electric Single Tank 110 litre Bulk Cooker with Single Basket Auto Lift

453118050

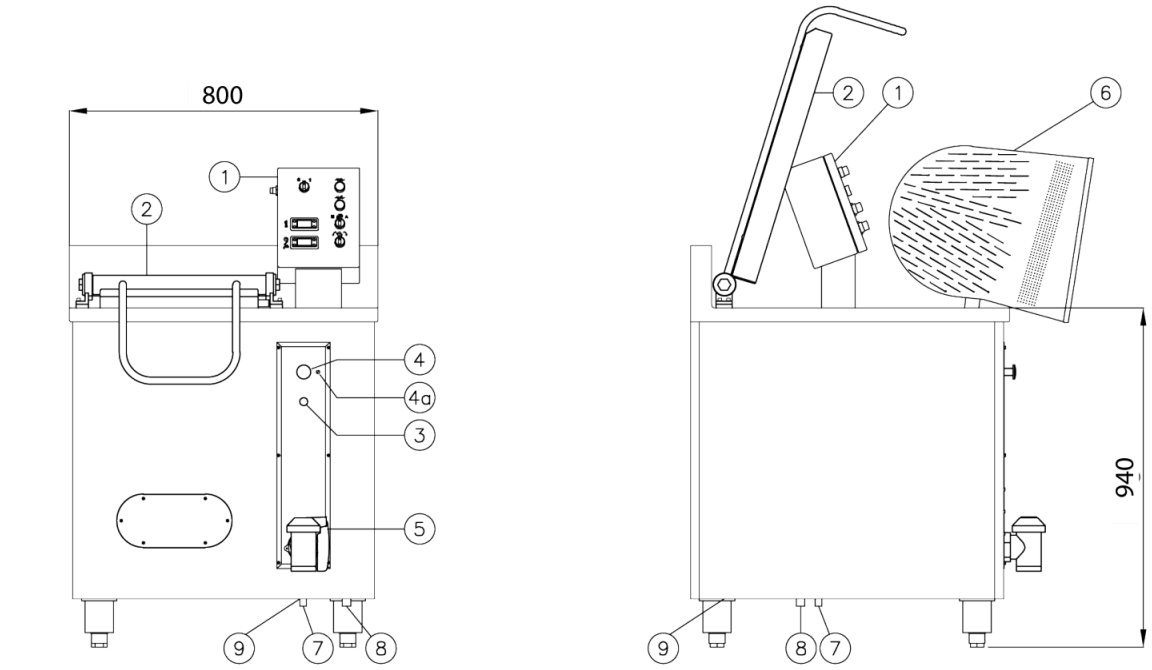


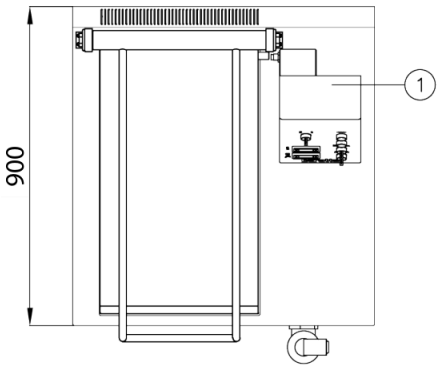


| | |
|---|---|
| 1 | Control panel |
| 2 | Lid |
| 3 | Phases control lamp |
| 4 | Emergency stop |
| 4a | Safety thermostat |

| | |
|---|---|
| 5 | Drain tap 2” |
| 6 | Basket |
| 7 | Cold water connection 1/2” M |
| 8 | Cord connector |
| 9 | Overflow drain |