DATA SHEET

Baratta BRT-150IMR Electric 150 litre Bratt Pan with Auto Tank Tilt

455102380



Build

- Heavy-duty robust construction built entirely from heavy gauge AISI 304 / 316 stainless steel and designed for intensive industrial use.
- Constructed with the highest quality materials and components, ensuring longevity, ease of maintenance, and adherence to the highest hygiene standards for cleaning and sanitization
- Designed and constructed with best-in-class insulation layers that minimize heat loss, optimize energy efficiency, and enhance cooking yield
- Heavy duty 150 litre corrosion resistant tank with radiused corners constructed entirely from heavy-gauge AISI 304 stainless steel and ideal for cooking acidic ingredients and with superior thermal efficiency.
- Thick-Rayed AISI 304 stainless steel bottom base with heavy iron cladded stel, enhancing thermal efficiency and stability, and ensuring optimal heat distribution and durability during intensive use.
- Heavy-gauge AISI 304 stainless steel lid is designed with a special mechanism for balanced weight, allowing for easy opening and secure locking in the open position.
- Heavy Gauge Large protruding handle for a comfortable grip during operation and enhanced working ergonomics.
- Electric tank tilting mechanism powered by a robust gear motor, enabling effortless emptying of the tank.
- Direct electric armoured stainless steel clad heating elements, positioned directly beneath the cooking base, are -powered by a 18.5 kW system, delivering optimal cooking power and precise temperature control.
- The cooking surface temperature probe measures and controls temperatures from 50°C to 300°C, ensuring perfect braising results.
- Safety thermostat prevents overheating by automatically shutting off the heating elements if temperatures exceed safe levels, ensuring reliable and secure operation.
- Durable Electromechanical controls allow for the simple and intuitive adjustment of the temperature control, tank tilting selector, and on/off controls, ensuring reliability, and user-friendly operation.
- Water tap Faucet included as standard IP44 water protection rating, safeguarding against dust and water splashes, suitable for various kitchen environments.
- Safety lamp alerts operators if any electrical phase issues occur ensuring enhanced safety.
- Backed by over 50 years of industry experience, Baratta continually innovates to exceed standards for strength, functionality, and maintenance, affirming its leadership in high-quality kitchen solutions.

Technical specifications

External Size

External Width	1385mm
External Depth	955 mm
External Height	900mm

Weight

Net weight	
package weight	

Technical Features

Tank Capacity	150 Lt
Tank Tilt Type	Automatic
Lid Lift Type	Manual
Control Type	Electromechanical
Temperature	50°C to 300°C

Connection requirements electric

Electrical connected loads	**18.5 Kw**
Voltage	**400/3+N/50**
Plug Supplied	**No**

Connection requirements Water

Cold Water Connection	**1/2" M**
Hot Water Connection	**1/2" M**

Build Inclusions

Water tap faucet	✓

Warranty

2 Year Warranty	2 years parts and labour

**Subject to a prevanttitive maintence plan*

DATA SHEET

Baratta BRT-150IMR Electric 150 litre Bratt Pan with Auto Tank Tilt

455102380

Options

Leg Options

☐	Lockable Wheel Set	
	Model: KR-4	SKU: 456131030
☐	Adjustable Flanged Feet	
	Model: FFM	SKU: 456131015



Hand Shower

☐	Hand Shower External	
	Model: DES	SKU: 456131228



Temperature Probes

☐	Core Well Probe	
	Model: STC-P	SKU: 456131120



DATA SHEET

Baratta BRT-150IMR Electric 150 litre Bratt Pan with Auto Tank Tilt

455102380

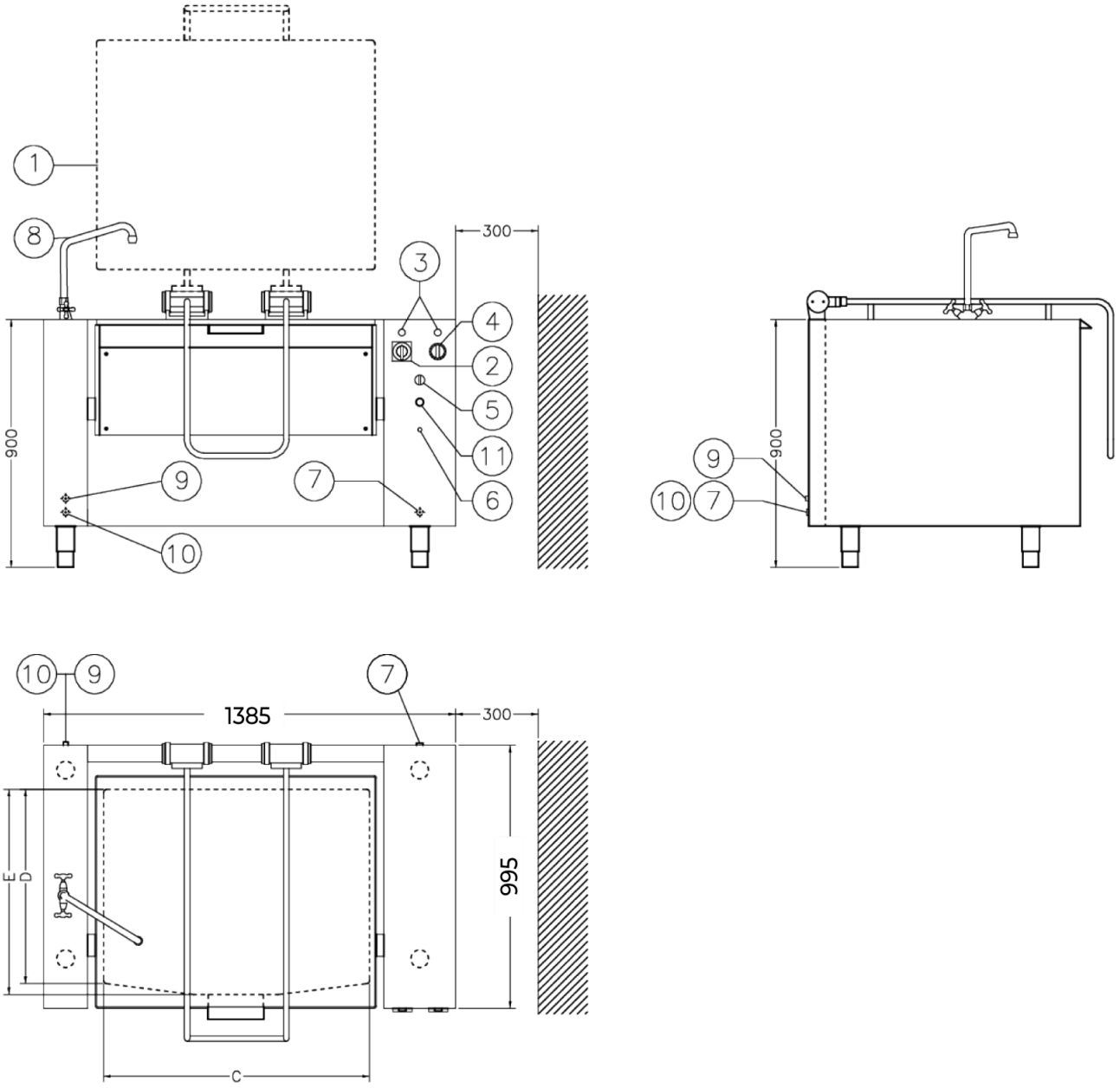

1	Lid
2	Main switch
3	Pilot lamps
4	Thermostat
5	Tilting Selector
6	Safety thermostat

7	Cord connector
8	Water mix tap (optional with extra cost)
9	Cold water connection 1/2 male (optional with extra cost)
10	Hot water connection 1/2 male (optional with extra cost)
11	Phases contol lamp