DATA SHEET

Baratta BMT-30M Electric 38 litre Bratt Pan with Auto Mixing | Manual Tilt

4541010045



Build

- Compact design with 30-liter capacity, tailored for gastronomy workshops, hotels, and restaurants.
- Heavy-duty robust construction built entirely from heavy gauge AISI 304 / 316 stainless steel and designed for intensive industrial use.
- Constructed with the highest quality materials and components, ensuring longevity, ease of maintenance, and adherence to the highest hygiene standards for cleaning and sanitization
- Designed and constructed with best-in-class insulation layers that minimize heat loss, optimize energy efficiency, and enhance cooking yield
- Heavy duty 38 litre corrosion resistant tank constructed entirely from heavy-gauge AISI 316 stainless steel and ideal for cooking acidic ingredients and with superior thermal efficiency.
- Thick-Rayed AISI 316 stainless steel bottom base enhances thermal efficiency and stability, ensuring optimal heat distribution and durability during intensive use.
- AISI 304 heavy-gauge stainless steel lid.
- Heavy-duty manual tilting mechanism that allows easy product emptying and effortless cleaning
- The mixing arms are controlled by a speed regulation knob, offering full variable speed capabilities. Powered by a durable variable-speed direct drive motor with an inverter, it supports a wide range of cooking applications and includes a reverse function for added versatility.
- Direct electric armoured heating elements, positioned directly beneath the cooking base, are -powered by a 6kW system, delivering optimal cooking power and precise temperature control.
- Product temperature probe controls the cooking temperatures from 50°C to 220°C using a side-mounted probe, ensuring consistent internal cooking tempertaures.
- The cooking surface temperature probe measures and controls temperatures from 50°C to 300°C, ensuring perfect braising results.
- The dual temperature management system integrates both temperature controls to guarantee perfect cooking results. The product temperature probe regulates food temperatures, while the surface temperature probe measures and controls the cooking plate temperature, ensuring perfect synergy for braising, grilling, and consistently cooked food every time Safety thermostat prevents overheating by automatically shutting off the heating elements if temperatures exceed safe levels, ensuring reliable and secure operation.
- IP44 water protection rating safeguards the Bratt pan against dust and water splashes, making it suitable for various kitchen environments.
- Safety thermostat prevents overheating by automatically shutting off the heating elements if temperatures exceed safe levels, ensuring reliable and secure operation.
- Durable electromechanical control panel enables precise programming of cooking functions, including thermostat adjustments on both the core product temperature and surface temperature, cooking time adjustments, mixer arm rotation speeds.
- Acoustic alert signals the completion of a programmed cooking cycle
- Backed by over 50 years of industry experience, Baratta continually innovates to exceed standards for strength, functionality, and maintenance, affirming its leadership in

Technical specifications

External Size

External Width	855mm
External Depth	690mm
External Height	930mm

Weight

Net weight	
package weight	

Technical Features

Tank Capacity	38Lt
Tilt Type	Manual
Lid Lifting Type	Manual
Temperature - Cooking Surface	50°C - 300°C
Temperature - Core Probe	50°C - 220°C

Connection requirements electric

Electrical connected loads	6.0W
Voltage	415/3+N/50
Plug Supplied	No

Warranty

2 Year Warranty	2 years parts and labour

**Subject to a prevanttitive maintence plan*

Options

Mixing Options

☐	Additional Lateral Tank Wall Scraper	
	Model: MBL-30R	SKU: 457010040
☐	Complete Mixing Set including Lateral scrapers	
	Model: MBLL-30R	SKU: 457010080

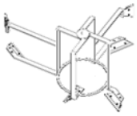

DATA SHEET

Baratta BMT-30M Electric 38 litre Bratt Pan with Auto Mixing | Manual Tilt

454101045

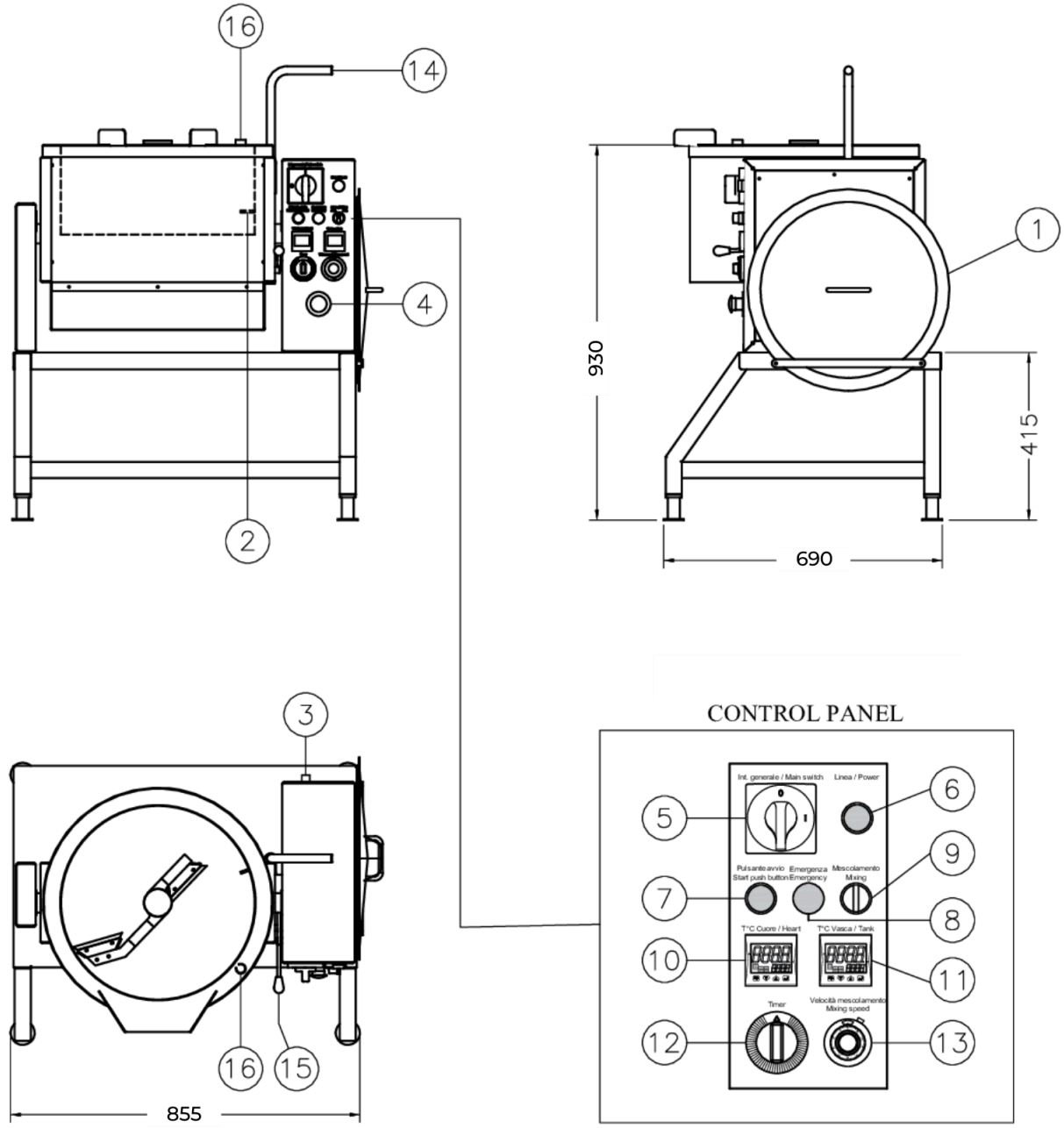

1	Lid
2	Heart probe
3	Cord connector
4	Emergency stop
5	Main switch
6	Power on pilot lamp
7	Push button start
8	Stop pilot lamp

9	Mixing selector
10	Heart probe thermostat
11	Tank thermostat
12	Timer
13	Speed mixing regulator
14	Tank rotating lever
15	Tilting block lever
16	Lid sensor