DATA SHEET

Baratta BMT-200 Electric 200 litre Bratt Pan with Auto Mixing | Auto Tank Tilt

454101200



Build

- Heavy-duty robust construction built entirely from heavy gauge AISI 304 / 316 stainless steel and designed for intensive industrial use.
- Constructed with the highest quality materials and components, ensuring longevity, ease of maintenance, and adherence to the highest hygiene standards for cleaning and sanitization
- Designed and constructed with best-in-class insulation layers that minimize heat loss, optimize energy efficiency, and enhance cooking yield
- Heavy duty 200 litre corrosion resistant tank constructed entirely from heavy-gauge AISI 316 stainless steel and ideal for cooking acidic ingredients and with superior thermal efficiency.
- Thick-Rayed AISI 316 stainless steel bottom base enhances thermal efficiency and stability, ensuring optimal heat distribution and durability during intensive use.
- Heavy-gauge AISI 304 stainless steel lid equipped with a special device for balanced weight, ensuring effortless opening.
- Electric tank tilting mechanism powered by a robust gear motor, enabling effortless emptying of the tank.
- Heavy-duty AISI 316 stainless steel mixing arms with food-grade Teflon scrapers on the bottom and optional scrapers on the walls of the tank. These mixing arms ensure seamless mixing, prevent food adhesion, and operate autonomously without user intervention.
- The mixing arms are controlled by a speed regulation knob, offering full variable speed capabilities. Powered by a durable variable-speed direct drive motor with an inverter, it supports a wide range of cooking applications and includes a reverse function for added versatility.
- Direct electric armoured heating elements, positioned directly beneath the cooking base, are -powered by a 22.5 kW system, delivering optimal cooking power and precise temperature control.
- Product temperature probe controls the cooking temperatures from 50°C to 220°C using a side-mounted probe, ensuring consistent internal cooking tempertaures.
- The cooking surface temperature probe measures and controls temperatures from 50°C to 300°C, ensuring perfect braising results.
- The dual temperature management system integrates both temperature controls to guarantee perfect cooking results. The product temperature probe regulates food temperatures, while the surface temperature probe measures and controls the cooking plate temperature, ensuring perfect synergy for braising, grilling, and consistently cooked food every time
- Safety thermostat prevents overheating by automatically shutting off the heating elements if temperatures exceed safe levels, ensuring reliable and secure operation.
- IP54 water protection rating safeguards the Bratt pan against dust and water splashes, making it suitable for various kitchen environments.
- Safety lamp alerts operators if any electrical phase issues occur ensuring enhanced safety.
- Durable electromechanical control panel enables precise programming of cooking functions, including thermostat adjustments on both the core product temperature and surface temperature, cooking time adjustments, tank tilting, and mixer arm rotation speeds. Simple and intuitive, controls are positioned above the unit for easy cleaning, reliability, and user-friendly operation.
- Acoustic alert signals the completion of a programmed cooking cycle
- Extensive range of options and accessories to meet the every possible application.
- Backed by over 50 years of industry experience, Baratta continually innovates to exceed standards for strength, functionality, and maintenance, affirming its leadership in

Technical specifications

External Size

External Width	1480mm
External Depth	1140mm
External Height	1070mm

Weight

Net weight	
package weight	

Technical Features

Tank Capacity	200 Lt
Tank Tilt Type	Automatic
Lid Lift Type	Manual
Control Type	Electromechanical
Product Temperature Probe	50°C to 220°C
Surface Temperature Thermostat	50°C to 300°C

Connection requirements electric

Electrical connected loads	22.5 kW
Voltage	400/3+N/50
Plug Supplied	No

Connection requirements Water

Cold Water Connection	1/2" M
Hot Water Connection	1/2" M

Build Inclusions

Core Tank Probe	✓
Core Temperature Probe	✓

Warranty

2 Year Warranty	2 years parts and labour

**Subject to a prevanttitive maintence plan*

DATA SHEET

Baratta BMT-200 Electric 200 litre Bratt Pan with Auto Mixing | Auto Tank Tilt

454101200

Options

Leg Options

☐	Lockable Wheel Set	
	Model: KR-4	SKU: 456131030
☐	Adjustable Flanged Feet	
	Model: PFT-1	SKU: 456131015



Hand Shower

☐	Hand Shower External	
	Model: DES	SKU: 456131228
☐	Hand Shower Retractible	
	Model: DFS	SKU: 456131230



Drain Filter

☐	Drain Filter for tank ø 750 mm	
	Model: FS-75	SKU: 456131207



Drain Tap

☐	2" Drain Tap	
	Model: MDS-1	SKU: 456131245
☐	Washout Valve 2'' DIN50 Connection	
	Model: DS2-50	SKU: 456131251

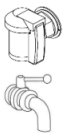

Lid Options

☐	Lid Hole with Grid	
	Model: CCI	SKU: 456130850
☐	Insulated Cover Ø 750 mm	
	Model: CCI-75	SKU: 456130820

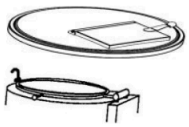

Mixing Options

☐	Additional Lateral Tank Wall Scraper	
	Model: MBL-200R	SKU: 457010052
☐	Complete Mixing Set including Lateral scrapers	
	Model: MBLL-200R	SKU: 457010092
☐	Additional Lateral Wing Mixer	
	Model: MAO-200R	SKU: 457010169



Control Panel Cover

☐	Control Panel Cover	
	Model: CPC	SKU: 456131135

DATA SHEET

Baratta BMT-200 Electric 200 litre Bratt Pan with Auto Mixing | Auto Tank Tilt

454101200

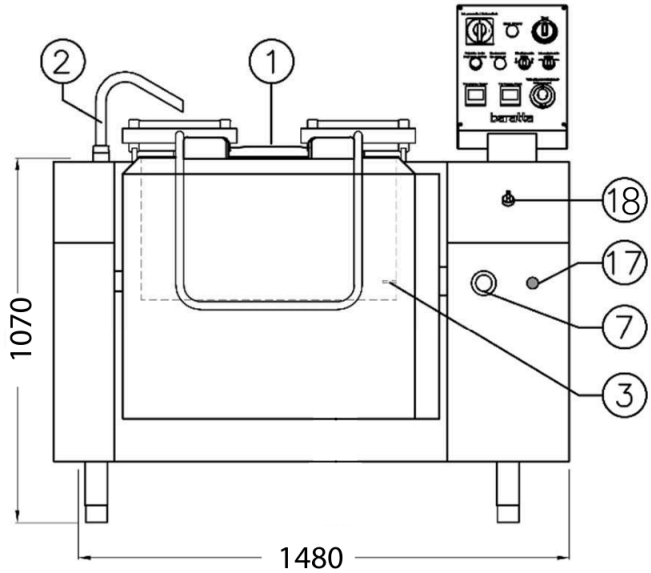

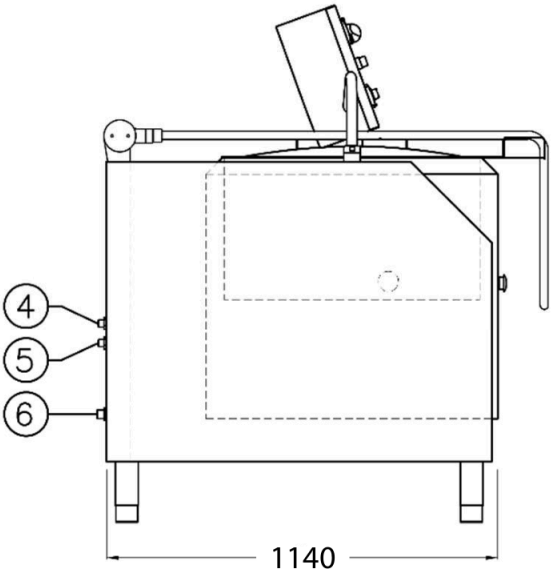

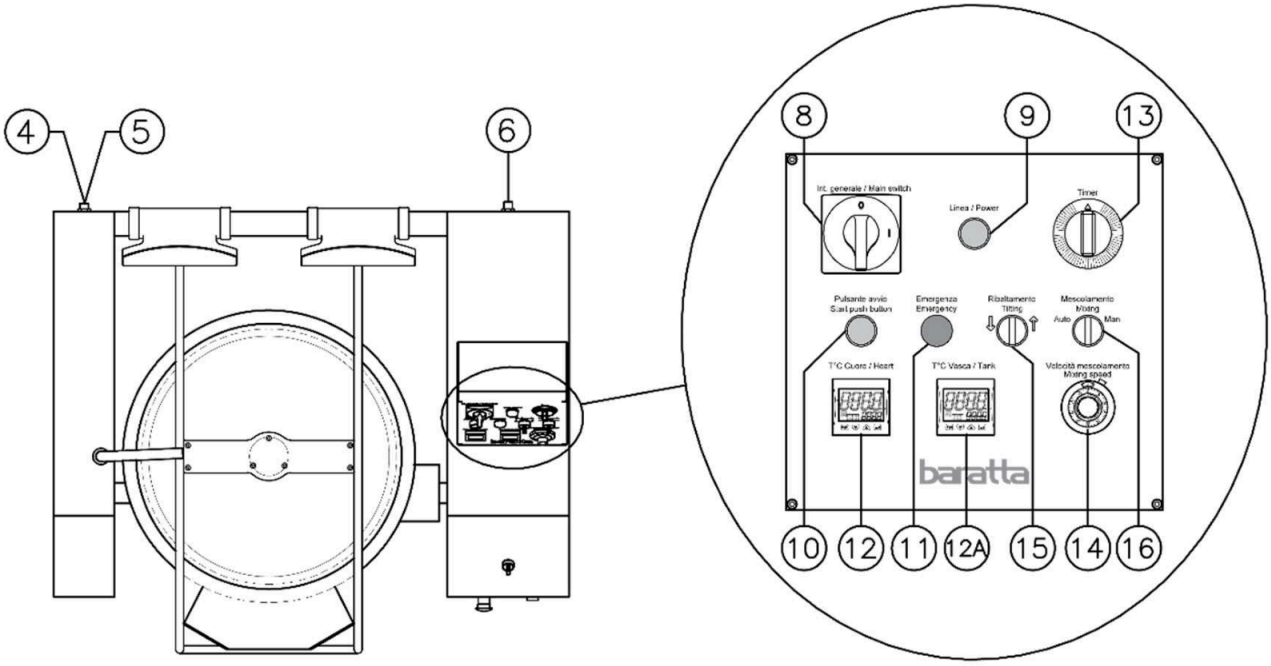

CONTROL PANEL

1	Lid
2	Water mix tap
3	Heart probe
4	Hot water connection 1/2" M
5	Cold water connection 1/2" M
6	Cord connector
7	Emergency stop
8	Main switch
9	Power on pilot lamp
10	Push button start

11	Stop pilot lamp
12	Heart probe thermostat
12a	Tank thermostat
13	Timer
14	Speed mixing regulator
15	Tilting selector
16	Mixing selector
17	Phases control lamp
18	Water Hot-Cold Selector