Checklist before installing the unit

Customer details

Company:		Contact:	
Street:		Post code:	
Place:		Country:	
Telephone:		E-mail:	

Tab. 1: Customer details:

Service data

Company:		Contact partner (technician)	

Tab. 2: Service data:

General information

NOTICE

Use a separate checklist for each unit.

1. Information on the new RATIONAL units:

Number of units:		Which models should be installed?	iCombi Pro	iCombi Classic

☐	☐	☐	☐	☐	☐	☐

2. Are there any RATIONAL units already installed or any units from other manufacturers?

Number of units:		Serial numbers of the units: (Mandatory for existing RATIONAL units)	

NOTICE

Fill in the lists below by filling in the missing information or by ticking the appropriate boxes.

Place of installation

1. Floor

What floor is the unit installed on?	

- Confidential -

Check doors and corridors for sufficient space

1. Door width required when transporting units:

	Without pallet		With pallet		
Model	mm	Inches	mm	Inches	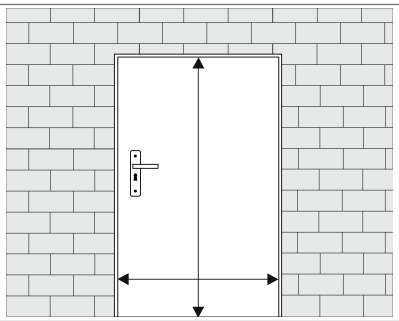
	555	21 7/8	885	34 7/8	
	800	31 1/2	1000	39 3/8	
	800	41 1/2	1000	39 3/8	
	1000	39 3/8	1200	47 1/4	
	1000	39 3/8	1200	47 1/4	
	870	34 1/4	1000	39 3/8	
	1160	45 43/64	1200	47 1/4	

2. Dimensions of doors and corridors at the customer site:

	Height:	Width:	Depth:	Tips:
Maximum dimensions of doors:				> Removing the door handle reduces the depth of the unit by 20 mm [6.25/8 inches]. > Tabletop units are also available with left-sided hinge.
Maximum dimensions of corridors:				

Check the installation site

1. Is the floor level?

Yes:	No:	If not, how big is the gradient (if > 3%, can you use an entry ramp)?
☐	☐	

2. Is ground level transportation into the building possible?

Yes:	No:	If not, description of the transport route.
☐	☐	

3. Enter the clearances on the left, right and behind the unit in the lower area in the table.

	Width		Depth		
Model	mm	Inches	mm	Inches	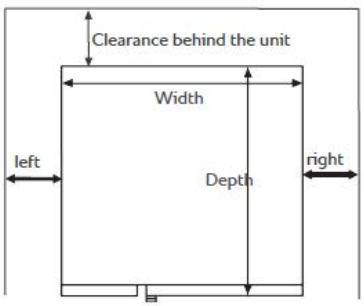
	655	25 3/4	555	21 7/8	
	850	33 1/2	775	30 1/2	
	850	33 1/2	775	30 1/2	
	1072	42 1/5	975	38 2/5	
	1072	42 1/5	975	38 2/5	
	877	34 1/2	847	33 1/8	
	1082	42 3/5	1052	41 1/7	

Clearances:					
Left:		Behind the unit		Right:	

4. Are there other units within 500 mm [20 inches] to the left of the RATIONAL unit (seen from the front)?

Yes:	No:	If yes, which unit?
☐	☐	

5. In the case of floor units, is there space for the mobile oven rack? (Width mobile oven rack: 201 of 561 mm [22 1/8 inches] & 202 of 772 mm [30 3/8 inches])

Yes:	No:
☐	☐

6. Is there an exhaust air system?

Yes:	No:	Is the unit under the exhaust air system?	
		Yes:	No:
		☐	☐
☐	☐	Position	
		Output:	

7. Enter the measured values in the table. Use the unit dimensions from the table above to calculate the clearances. If the connection points are in a different location than on the sketch, enter them here.

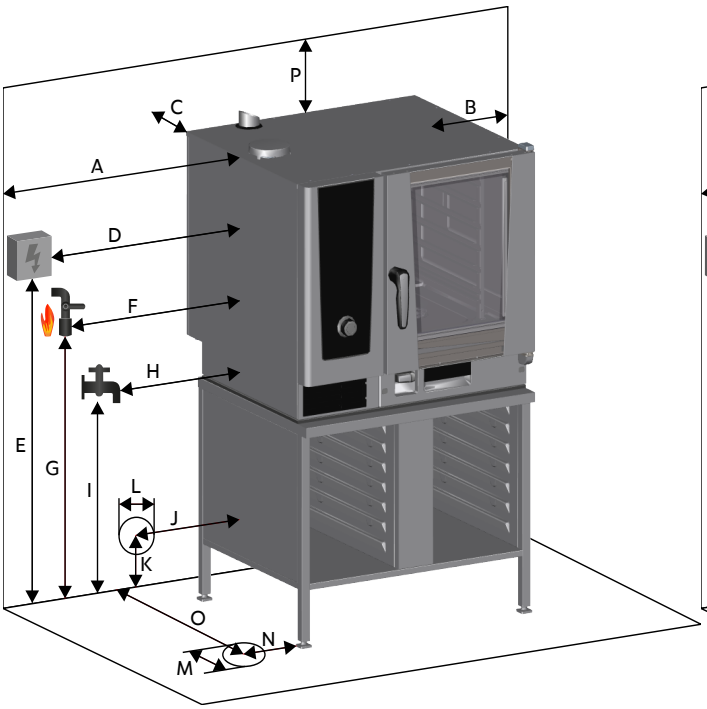

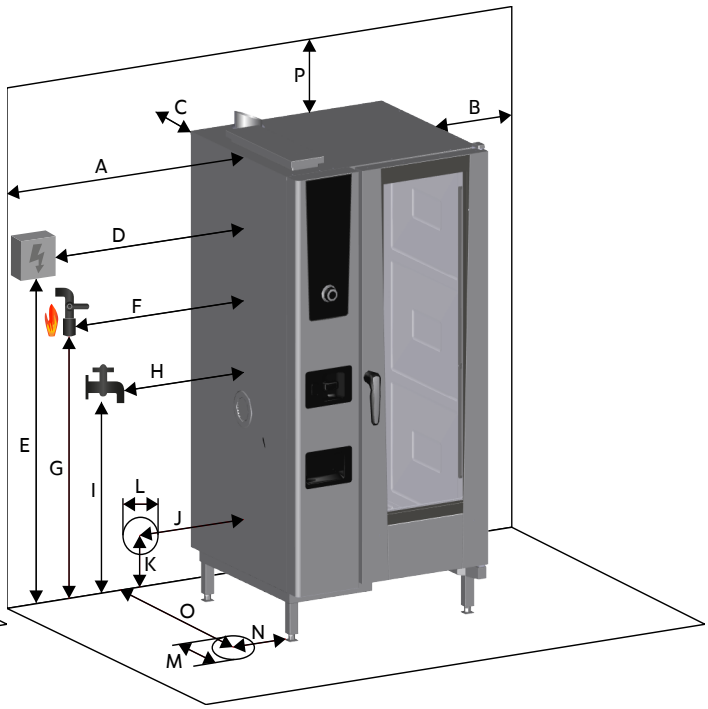

Side clearances			
A	B	C	P

Power supply	
T	E
Is there an additional 230 V connection available?	If yes, enter the position in the chart.

Gas supply	
F	G

Water supply:	
H	I

Waste water*: Tabletop units, floor units or Combi Duo * Connection without siphon					
J	K	L	M	N	O

Internet connection:		
Is there an LAN port available?	If yes, enter the connection position in the chart.	
Is there a wireless network available?	Yes:	No:

Is wall mounting possible?	
Yes:	No:

Electrical connection

1. Which voltage system does the customer have?

Electrical connection			
1NAC	2AC	3NAC	3AC

2. What fuse is available?

Fuse (A)	
	A

3. Is there a residual current circuit breaker (30mA)?

Residual current circuit breaker (30mA)			
Yes:	No:	If yes, what type?	
		A	B

4. What type of connection is available?

Connection type:	
Plug:	Permanent connection:

Water supply

1. Is a water treatment system installed?

Yes:	No:	If yes, what type of water treatment system is there?
☐	☐	

2. What is the conductance of the water?

Yes:	If yes, conductance of the water:					No:	If not, check conductance of the water:
☐		µS	☐	ppm TDS	☐	☐	

3. What is the water hardness of the water?

Yes:	If yes, water hardness of the water:					No:	If not, check water hardness of the water.
☐		°dH	☐	gr/gal	☐	☐	

4. What is the PH value of the water?

Yes:	If yes, PH value of the water:	No:	If not, check the PH value of the water.
☐		☐	

5. Is there a separate tap for each unit?

Yes:	No:
☐	☐

6. Measured water pressure:

Measured water pressure (bar or psi)				
	bar	☐	psi	☐

7. Measured water temperature (max. 30°C, 86°F):

Measured water temperature (max. 30°C, 86°F)				
	°C	☐	°F	☐

8. Is a complete connection set necessary (#60.70.464)?

Yes:	No:
☐	☐

NOTICE

The unit has a ¾ inch connection.

Gas supply (for gas units)

NOTICE

Inform the customer that both the gas supply and the exhaust systems must be agreed on with the relevant authorities.

1. What gas type is used by the customer?

Natural gas H G20	Natural gas L G25	LPG G30	LPG G31	LPG Australia	Natural gas Australia	Natural gas A13	Liquid gas Japan	Natural gas G20 USA	Propane gas 3P G31 USA
☐	☐	☐	☐	☐	☐	☐	☐	☐	☐

2. What connection type is available?

Connection type:	
Plug:	Permanent connection:
☐	☐

3. Is exhaust air available for gas?

Yes:	No:	If yes, what type of exhaust air is available?
☐	☐	

Waste water

NOTICE

Connection may only be made without a siphon.

1. Material of the waste water pipe:

Material of the waste water pipe:

2. Is a siphon already available?

Yes:	No:	If yes, where is the siphon located? (possibly also flush-mounted)
☐	☐	

3. Is there a separate waste water connection for each unit?

Yes:	No:
☐	☐

4. Is a lifting system available?

Yes:	No:	If yes, what lifting system is available?
☐	☐	

Special characteristics

1. Are there any special aspects that were not listed in the previous points, if so which ones?

Yes:	No:	If yes, what type of special aspects?
☐	☐	

2. The customer was informed of the 2 year warranty.

Yes:	No:
☐	☐

3. Are all dimensions and clearances, the electrical connection, water supply, waste water and the gas supplies according to this list correctly available and implemented?

Signature of Customer:	Signature of Sales Department:	Date: