GF36-4G12T

900mm WIDE RESTAURANT SERIES
4 BURNER COMBINATION MODULAR TOP

The Garland Heavy Duty Restaurant Series is a commercial range that has been engineered for unmatched performance and durability.

Garland's exclusive cast-iron Starfire Pro® burners combine speed with precision and even heat distribution to improve efficiency and control. All of the burners in the range are made of cast-iron for better heat retention and lasting durability.

Featuring stainless steel construction with a large front 127mm 'plate rail' and backguard that matches the other Restaurant Series units giving a sleek clean finish.

Item GF36-4G12T is a combination modular top model with 4 burners and 300mm griddle.

2 piece burners are easy to remove and clean with protected individual pilot lights and flame failure as standard. Large 686mm deep work surface fits four 300mm pots easily and grate design allows pots to slide across the surface easily. Premium 15mm thick griddle with powerful cast iron 'H' burners for even heat distribution.

Large easy-to-use control knobs sit flush to the 'plate rail' and the unit can sit on top of the optional stainless steel stand with storage shelf.



GF36-4G12T pictured with optional stand

STANDARD FEATURES
- Manual ignition for all open burners
- 300mm stamped drip trays w/dimpled base
- Set 4 legs for countertop mounting
- Gas regulator
- Available in Natural or Propane Gas

OPTIONAL FEATURES
- Stainless steel stand with shelf and adjustable feet - MS-G36
- Swivel Fixed Height Castors for stand - legs must be shortened by 100mm - MS-CSTR (non brake), MS-CSTRB (brake)
- Grooved Griddle in 300mm sections - Specify -GRV
- Electronic ignition - Specify GFE36 (240V,1P,10A lead & plug not included)
- Flexible gas hose with quick disconnect and restraining kit - 432018-1200HK

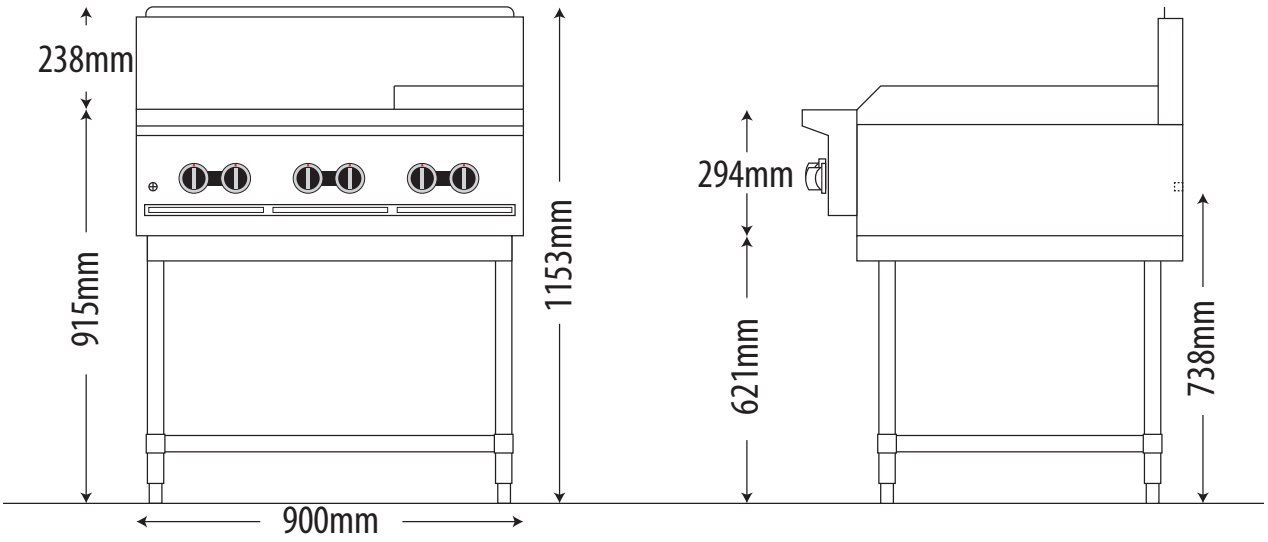

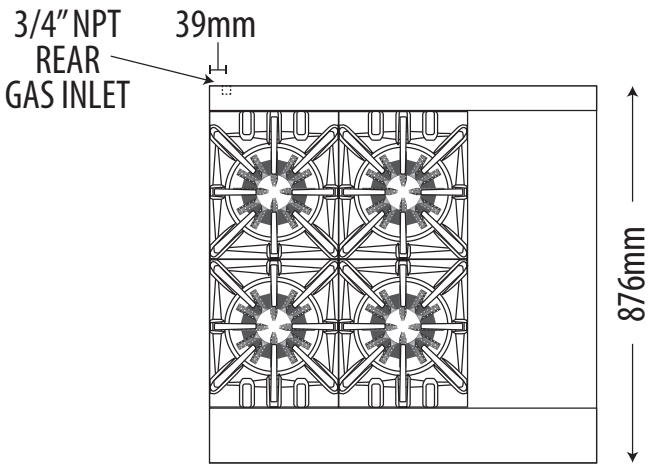

DIMENSIONS		
External Dimension: 600W x 876D x 1153H (with stand) mm		
Working height : 915mm		
Griddle : 300W x 585D mm		
Combustible wall clearance: Side: 152mm, Rear: 152mm		
TECHNICAL DATA		
Gas Type: Natural or Propane		
Total Output:	Natural 141.4MJ	Propane 132MJ
Burner Ratings: Open Burner	Natural 30.6MJ	Propane 28.5MJ
Griddle per 300mm	19MJ	18MJ
Gas Connection: ¾"		
SHIPPING DATA		
Shipping weight: 100kg		
AGA APPROVAL NUMBER		
AGA 7455 G		

SPECIFICATIONS ARE SUBJECT TO CHANGE WITHOUT NOTICE.