Frymaster®

INDUSTRY KITCHENS
www.industrykitchens.com.au 1800 611 058

FPH355 SERIES
HIGH EFFICIENCY GAS FRYER WITH FILTRATION - 3 POT

Frymaster's H55 is a premium open-pot fryer that combines state-of-the-art technology with decades of frying experience and customer satisfaction to set the standard for high-efficiency frying. The H55 fryer saves thousands of dollars annually on energy costs.

Infrared burners and blower system delivers an ultra-refined air-gas mixture so the fryer operates well in any gas application such as at high altitudes, in environments where air circulation is sub-optimal or when the heating value of the gas is diminished. Frymaster's renowned, built-in filtration system puts filtration where it's most convenient to use - right within the fryer battery•· eliminating the need for additional floor and storage space.

FRYER STANDARD FEATURES

- Open-pot design (split or full) is easy to clean
- (25 L) oil capacity per full frypot; 12.5L per split frypot
- Frying area: (35.6 x 38.1 x 11.4 cm) per full frypot; (16.5 x 38.1 x 12.1 cm) per split frypot
- CM3.5 controllers
- Stainless steel frypot, door and cabinet
- Center-mounted, RTD, 1º compensating temperature probe
- Deep cold zone with forward-sloping bottom and IPS full-port, ball-type drain valve-- 1-1 /4" full frypot; 1" (split frypot)
- Infrared burners ensure state-of-the-art heat transfer
- Electronic ignition
- Automatic melt cycle and boil-out temperature control
- Two baskets per frypot
- Castors
- Built-infiltration
- Drain safety switch
- Rear oil flush
- Frypot covers
- Front Oil Discharge with 168cm wand - refer coding guide table

FILTER STANDARD FEATURES

- 25 litre oil capacity
- Space-saving filter which fits inside fryer cabinet housing two full or qualifying split frypots in two left most cabinets of the battery
- Filter pan designed on rails to clear floormats for easy cleaning
- Sloped drain pan leaves minimal residue oil behind after filtering
- Large 3" (8.0 cm) round drain line allows oil to drain freely
- 1/3 H.P. filter motor
- 4 GPM (15 LPM) pump
- Stainless steel crumb catcher
- Filter starter kit

OPTIONAL FEATURES

- Basket lifts (-BL)
- Spreader cabinet(s) with heat lamp (CABSC-FWH1A)
- Chicken / Fish plate (S51058)
- Sediment tray(s) - (8030103)
- Split pot(s) - refer coding guide table
- Rear Oil Discharge (-RD) - replaces Front Oil Discharge



CODING GUIDE	
FPH355C-FD	3 Full Pots
FPH355-2C-FD	2 Full Pots, 1 Split Pot
FPH355-4C-FD	1 Full Pot, 2 Split Pots
FPH355-6C-FD	3 Split Pots

DIMENSIONS

External: 1191W x 752D x 1158H mm

Clearance: Sides and rear 152mm, Front 610mm (from combustible walls)

A minimum of 610 mm should be provided at the front of the unit for servicing and proper operation, and 152 mm between the sides and rear of the fryer to any combustible material.

TECHNICAL DATA

Gas Type: Natural or Propane

Total Output: 253.2MJ

Gas Connection: 1"

Power Supply: 230/240V, 50Hz, 6A (Cord & 10A Plug provided)

PRODUCTION CHIPS FROM FROZEN

36kg per hour / per pot

CONTROLLER AS STANDARD

CM3.5 Computer Controller

AGA APPROVAL NUMBER

AGA 3814 G

SHIPPING DATA

Shipping Weight: 304kg

Shipping Dimensions: 1359W x 1118D x 1473H mm

SPECIFICATIONS ARE SUBJECT TO CHANGE WITHOUT NOTICE.

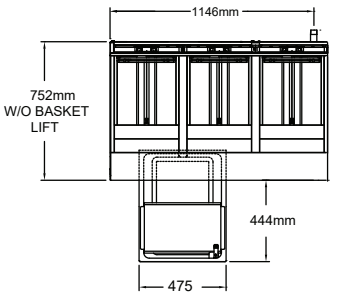

TOP VIEW

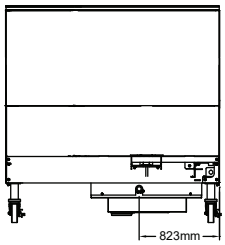

BACK VIEW

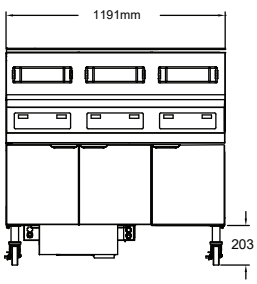

FRONT VIEW

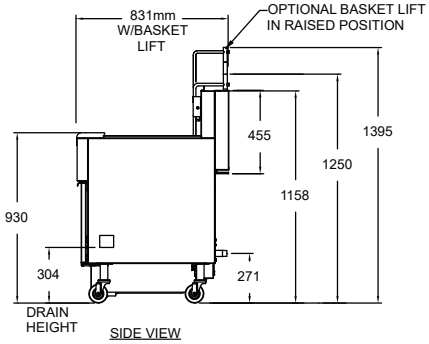

SIDE VIEW